Manualslib.com - The Global Manuals Library

JVC LT-32X667 SERVICE MANUAL

Quick Links

Rear Panel Diagram

Table of Contents

PRECAUTION
SPECIFIC SERVICE INSTRUCTIONS
DISASSEMBLY
ADJUSTMENT
adjustment mode
Unpacking your TV
Using the stand
TV Models
rear panel diagram
TV Remote Control
Getting Started
The Remote Control
Connecting Your Devices
cable or antenna
tv rear panel
vcr connection
connecting to a camcorder
headphone connection
connecting to an external amplifier
connecting to a digital tv receiver
connecting to the computer
table of signals for each type of computer
Interactive Plug In Menu
auto clock set
manual clock set

Programming your remote
vcr codes
dvd codes
search codes
Using the Guide
Onscreen Menu System
Auto Tuner Setup
Channel Summary
V-Chip
unrated programs
directions to set us v-chip ratings
setting us v-chip ratings
directions to set movie (mpaa) ratings
directions to set canadian v-chip ratings
Set Lock Code
Language
Closed Caption
Auto Shut Off
XDS ID
Noise Muting
Front Panel Lock
V1 Smart Input
Video Input Label
Position Adjustment
Power Indicator
Digital-In
Digital-In1 Audio

Digital Setup

antenna level

digital sound

software update

software version

Picture Settings

Color Temperature

Color Management

Dynamic Gamma

Smart Picture

Digital VNR

MPEG NR

Smart Sensor

Sensor Effect

Reset

Sound Settings

Turn On Volume

Volume Limit

Reset

Set Clock

On/Off Timer

Multi Screen Function

Split

Freeze

Index

Select

Swap

Menu

Back

Power

Number Buttons

Tune

Input

TheaterPro

Return+/TV

Sound

Video Status

Natural Cinema

Sleep Timer

ML/MTS

Muting

Display

Channel

Volume

Favorite

Aspect

Aspect Ratios

TV/CATV Slide Switch

VCR/DVD Slide Switch

VCR Buttons

DVD Buttons

Light

D/A (Digital/Analog)

Sub Channel
Guide
Weak Signal
No Program
Invalid Signal
standard circuit diagram
ANALOG PWB CIRCUIT DIAGRAM
DIGITAL PWB CIRCUIT DIAGRAM
POWER PWB CIRCUIT DIAGRAM
LED PWB CIRCUIT DIAGRAM
SW PWB CIRCUIT DIAGRAM
D-AMP PWB CIRCUIT DIAGRAM
DC-DC PWB CIRCUIT DIAGRAM
OPTICAL PWB CIRCUIT DIAGRAM
ANALOG PWB PATTERN
DIGITAL PWB PATTERN
POWER PWB PATTERN
DC-DC PWB PATTERN
LED PWB PATTERN
SW PWB PATTERN
D-AMP PWB PATTERN
OPTICAL PWB PATTERN
parts list
USING P.W. BOARD & REMOTE CONTROL UNIT
EXPLODED VIEW PARTS LIST -1
EXPLODED VIEW -1

EXPLODED VIEW -2
EXPLODED VIEW PARTS LIST -2
EXPLODED VIEW -3
EXPLODED VIEW PARTS LIST -3
PRINTED WIRING BOARD PARTS LIST [LT-32X667/Z]
SD CARD P.W. BOARD ASS'Y (SFL-1305A-M2)
ANALOG P.W. BOARD ASS'Y (SFL-1311A-M2)
OPTICAL P.W. BOARD ASS'Y (SFL-2501A-M2)
D-AMP P.W. BOARD ASS'Y (SFL-6301A-M2)
SW P.W. BOARD ASS'Y (SFL-7207A-M2)
LED P.W. BOARD ASS'Y (SFL-8901A-M2)
POWER P.W. BOARD ASS'Y (SFL-9048A-M2)
DC-DC P.W. BOARD ASS'Y (SFL-9154A-M2)
DIGITAL P.W. BOARD ASS'Y (SFL0D178A-M2)
ATSC TUNER MODULE P.W. BOARD ASS'Y (SSD-2204A-M2)
SD CARD P.W. BOARD ASS'Y (SFL-1305A-M2)
ANALOG P.W. BOARD ASS'Y (SFL-1311A-M2)
OPTICAL P.W. BOARD ASS'Y (SFL-2501A-M2)
D-AMP P.W. BOARD ASS'Y (SFL-6301A-M2)
SW P.W. BOARD ASS'Y (SFL-7207A-M2)
LED P.W. BOARD ASS'Y (SFL-8901A-M2)
POWER P.W. BOARD ASS'Y (SFL-9048A-M2)
DIGITAL P.W. BOARD ASS'Y (SFL0D175A-M2)
ATSC TUNER MODULE P.W. BOARD ASS'Y (SSD-2204A-M2)
PRINTED WIRING BOARD PARTS LIST [LT-32X887/Z]
SD CARD P.W. BOARD ASS'Y (SFL-1305A-M2)
ANALOG P.W. BOARD ASS'Y (SFL-1311A-M2)
OPTICAL P.W. BOARD ASS'Y (SFL-2501A-M2)

D-AMP P.W. BOARD ASS'Y (SFL-6301A-M2)
SW P.W. BOARD ASS'Y (SFL-7207A-M2)
LED P.W. BOARD ASS'Y (SFL-8901A-M2)
POWER P.W. BOARD ASS'Y (SFL-9048A-M2)
DC-DC P.W. BOARD ASS'Y (SFL-9154A-M2)
DIGITAL P.W. BOARD ASS'Y (SFL0D173A-M2)
ATSC TUNER MODULE P.W. BOARD ASS'Y (SSD-2204A-M2)
PACKING
PACKING PARTS LIST
REMOTE CONTROL UNIT PARTS LIST (RM-C18G-1H)
Other ManualsLib Projects

JVC

SERVICE MANUAL

LCD PANEL TELEVISION

LT-32X667/Z, LT-32X787/Z, LT-32X887/Z

BASIC CHASSIS
FL4

[LT-32X787/Z]

TABLE OF CONTENTS

1 PRECAUTION 1-3
2 SPECIFIC SERVICE INSTRUCTIONS 1-6
3 DISASSEMBLY 1-9
4 ADJUSTMENT 1-16
5 TROUBLESHOOTING 1-22

COPYRIGHT © 2006 Victor Company of Japan, Limited

No.YA428
2006/6

SPECIFICATION

Items		Contents
Dimensions (W × H × D)		80.0 cm × 58.9 cm × 26.8 cm (31-1/2" × 23-1/4" × 10-5/8") [Included stand] 80.0 cm × 54.5 cm × 13.8 cm (31-1/2" × 21-5/8" × 5-1/2") [Included stand]
Mass		17.4 kg (38.3 lbs) [Included stand] 15.9 kg (35.0 lbs) [TV only]
Power Input		AC120 V , 60 Hz
Power Consumption		160 W (Max)
TV RF System (Analog / Digital)	Analog Digital	CCIR (M) ATSC terrestrial / Digital cable
Color System (Analog)		NTSC
Stereo System (Analog)		BTSC (Multi Channel Sound)
Teletext System (Analog)		Closed caption (T1-T4 / CC1-CC4)
TV Receiving Channels and Frequency (Analog)	VHF Low VHF High UHF CATV	02 ch - 06 ch : 54 MHz - 88 MHz 07 ch - 13 ch : 174 MHz - 216 MHz 14 ch - 69 ch : 470 MHz - 806 MHz 54 MHz - 804 MHz Low Band : 02 - 06 High Band : 07 - 13 Mid Band : 14 - 22 Super Band : 23 - 36 Hyper Band : 37 - 64 Ultra Band : 65 - 94, 100 - 135 Sub Mid Band : 01, 96 - 99
TV / CATV Total Channel		191 Channels
Intermediate Frequency (Analog)	Video IF Sound IF	45.75 MHz 41.25 MHz (4.5 MHz)
Color Sub Carrier Frequency (Analog)		3.58 MHz
LCD panel		32V-inch wide aspect (16:9)
Screen Size		Diagonal : 80 cm (H:69.7 cm × V :39.2 cm)
Display Pixels		Horizontal : 1366 dots × Vertical : 768 dots (W-XGA)
Audio Power Output		10 W + 10 W
Speaker		5.5 cm × 15 cm, Oval type × 2
Antenna Terminal (VHF/UHF, ATSC / DIGITAL CABLE IN)		F-type connector, 75Ω unbalanced, coaxial × 1
Video / Audio input [INPUT-1/2/3]	Component Video [INPUT-1] 1125i / 750p 525p / 525i S-Video [INPUT-1/2] Video Audio	RCA pin jack × 3 Y : 1 V (p-p) (Sync signal: 0.35V(p-p), 3-value sync.), 75 Ω Pb/Pr : ±0.35V(p-p), 75 Ω Y : 1 V (p-p), Positive (Negative sync provided), 75 Ω Cb/Cr : 0.7V(p-p), 75 Ω Mini-DIN 4 pin × 2 Y: 1 V (p-p), Positive (Negative sync provided), 75 Ω C: 0.286V (p-p) (Burst signal), 75 Ω 1 V (p-p), Positive (Negative sync provided), 75 Ω, RCA pin jack × 3 500 mV (rms), High impedance, RCA pin jack × 6
Digital input [DIGITAL-IN 1/2]	Video Audio	HDMI 2-row 19pin connector × 2 (Digital-input terminal is not compatible with picture signals of personal computer) Digital: HDMI 2-row 19pin connector × 2 Anarog: 500mV(rms) (-4dBs), high impedance, RCA pin jack × 2
PC (RGB) Input		D-sub 3-row 15pin × 1 R/G/B : 0.7V (p-p), 75Ω HD / VD : 1V (p-p) to 5V (p-p), high impedance < Available signal > VGA : 640 pixels × 480 pixels (Horizontal : 31.5kHz / Vertical : 60Hz) XGA : 1024 pixels × 768 pixels (Horizontal : 48.4kHz / Vertical : 60Hz)
Audio output		250 mV (rms), Low impedance, RCA pin jack × 2
iLink Input/Output		TS In/Out (4-pin, S400) × 2, IEEE1394 compliant DTCP digital copy protection compatible
Digital Audio Optical Output		Digital SPDIF × 1
Headphone		3.5 mm stereo mini jack × 1
Remote Control Unit		RM-C18G (AA/R6 / UM-3 battery × 2)

Design & specifications are subject to change without notice.

SECTION 1
PRECAUTION

1.1 SAFETY PRECAUTIONS

(1) The design of this product contains special hardware, many circuits and components specially for safety purposes. For continued protection, no changes should be made to the original design unless authorized in writing by the manufacturer. Replacement parts must be identical to those used in the original circuits. Service should be performed by qualified personnel only.

(2) Alterations of the design or circuitry of the products should not be made. Any design alterations or additions will void the manufacturer's warranty and will further relieve the manufacturer of responsibility for personal injury or property damage resulting therefrom.

(3) Many electrical and mechanical parts in the products have special safety-related characteristics. These characteristics are often not evident from visual inspection nor can the protection afforded by them necessarily be obtained by using replacement components rated for higher voltage, wattage, etc. Replacement parts which have these special safety characteristics are identified in the parts list of Service manual. **Electrical components having such features are identified by shading on the schematics and by (⚠) on the parts list in Service manual**. The use of a substitute replacement which does not have the same safety characteristics as the recommended replacement part shown in the parts list of Service manual may cause shock, fire, or other hazards.

(4) **Don't short between the LIVE side ground and ISOLATED (NEUTRAL) side ground or EARTH side ground when repairing.**
Some model's power circuit is partly different in the GND. The difference of the GND is shown by the LIVE : (⊥) side GND, the ISOLATED (NEUTRAL) : (⏚) side GND and EARTH : (⏚) side GND.
Don't short between the LIVE side GND and ISOLATED (NEUTRAL) side GND or EARTH side GND and never measure the LIVE side GND and ISOLATED (NEUTRAL) side GND or EARTH side GND at the same time with a measuring apparatus (oscilloscope etc.). If above note will not be kept, a fuse or any parts will be broken.

(5) When service is required, observe the original lead dress. Extra precaution should be given to assure correct lead dress in the high voltage circuit area. Where a short circuit has occurred, those components that indicate evidence of overheating should be replaced. Always use the manufacturer's replacement components.

(6) **Isolation Check (Safety for Electrical Shock Hazard)**
After re-assembling the product, always perform an isolation check on the exposed metal parts of the cabinet (antenna terminals, video/audio input and output terminals, Control knobs, metal cabinet, screw heads, earphone jack, control shafts, etc.) to be sure the product is safe to operate without danger of electrical shock.

a) **Dielectric Strength Test**
The isolation between the AC primary circuit and all metal parts exposed to the user, particularly any exposed metal part having a return path to the chassis should withstand a voltage of 3000V AC (r.m.s.) for a period of one second. (. . . Withstand a voltage of 1100V AC (r.m.s.) to an appliance rated up to 120V, and 3000V AC (r.m.s.) to an appliance rated 200V or more, for a period of one second.)
This method of test requires a test equipment not generally found in the service trade.

b) **Leakage Current Check**
Plug the AC line cord directly into the AC outlet (do not use a line isolation transformer during this check.). Using a "Leakage Current Tester", measure the leakage current from each exposed metal part of the cabinet, particularly any exposed metal part having a return path to the chassis, to a known good earth ground (water pipe, etc.). Any leakage current must not exceed 0.5mA AC (r.m.s.).
However, in tropical area, this must not exceed 0.2mA AC (r.m.s.).

Alternate Check Method
Plug the AC line cord directly into the AC outlet (do not use a line isolation transformer during this check.). Use an AC voltmeter having 1000Ω per volt or more sensitivity in the following manner. Connect a 1500Ω 10W resistor paralleled by a 0.15μF AC-type capacitor between an exposed metal part and a known good earth ground (water pipe, etc.). Measure the AC voltage across the resistor with the AC voltmeter. Move the resistor connection to each exposed metal part, particularly any exposed metal part having a return path to the chassis, and measure the AC voltage across the resistor. Now, reverse the plug in the AC outlet and repeat each measurement. Any voltage measured must not exceed 0.75V AC (r.m.s.). This corresponds to 0.5mA AC (r.m.s.).
However, in tropical area, this must not exceed 0.3V AC (r.m.s.). This corresponds to 0.2mA AC (r.m.s.).

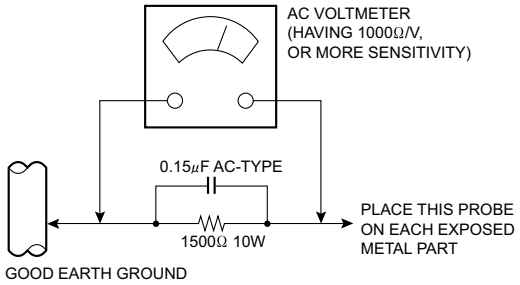

1.2 INSTALLATION

1.2.1 HEAT DISSIPATION

If the heat dissipation vent behind this unit is blocked, cooling efficiency may deteriorate and temperature inside the unit will rise. The temperature sensor that protects the unit will be activated when internal temperature exceeds the pre-determined level and power will be turned off automatically.Therefore, please make sure pay attention not to block the heat dissipation vent as well as the ventilation outlet behind the unit and ensure that there is room for ventilation around it.

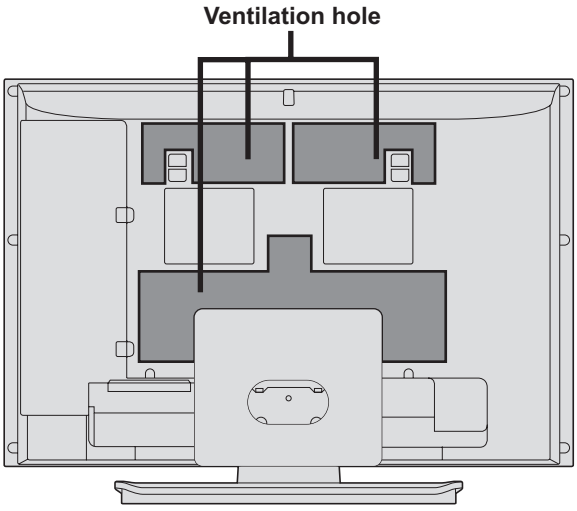

*Diagram differs from actual appearance.

1.2.2 INSTALLATION REQUIREMENTS

Ensure that the minimal distance is maintained, as specified below, between the unit with and the surrounding walls, as well as the floor etc.Install the unit on stable flooring or stands.Take precautionary measures to prevent the unit from tipping in order to protect against accidents and earthquakes.

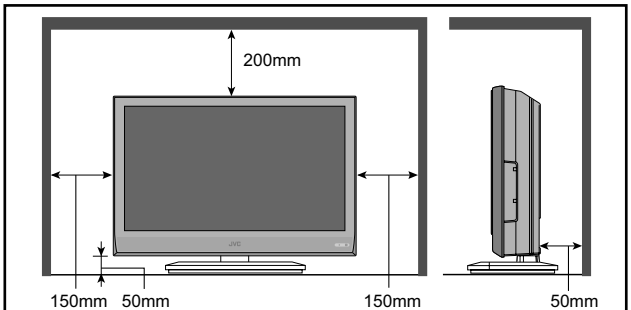

*Diagram differs from actual appearance.

1.2.3 INSTALLATION REQUIREMENTS

To ensure safety in an emergency such as an earthquake, and to prevent accidents, ensure that measures are taken to prevent the TV dropping or falling over.

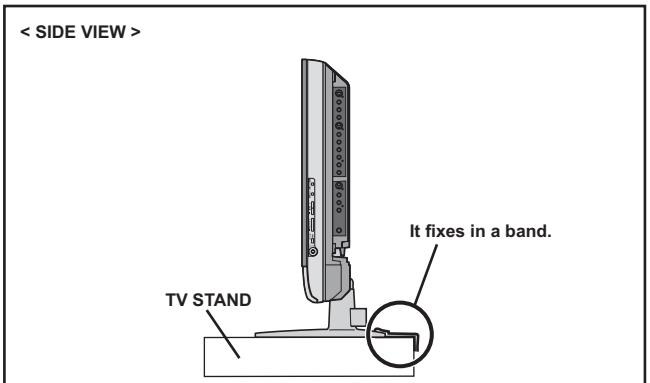

*Diagram differs from actual appearance.

1.2.4 NOTES ON HANDLING

(1) WHEN TAKING UNIT OUT OF A PACKING CASE
When taking the unit out of a packing case, do not grasp the upper part of the unit. If you take the unit out while grasping the upper part, the LCD PANEL may be damaged because of a pressure. Instead of grasping the upper part, put your hands on the lower backside or sides of the unit.

(2) AS FOR PRESSING OR TOUCHING A SPEAKER
Be careful not to press the opening of the speaker in the lower part of the unit and around them since the decorative sheet on the surface of the openings may be deformed.

1.3 HANDLING LCD PANEL

1.3.1 PRECAUTIONS FOR TRANSPORTATION

When transporting the unit, pressure exerted on the internal LCD panel due to improper handling (such as tossing and dropping) may cause damages even when the unit is carefully packed. To prevent accidents from occurring during transportation, pay careful attention before delivery, such as through explaining the handling instructions to transporters.

Ensure that the following requirements are met during transportation, as the LCD panel of this unit is made of glass and therefore fragile:

(1) USE A SPECIAL PACKING CASE FOR THE LCD PANEL
When transporting the LCD panel of the unit, use a special packing case (packing materials). A special packing case is used when a LCD panel is supplied as a service spare part.

(2) ATTACH PROTECTION SHEET TO THE FRONT
Since the front (display part) of the panel is vulnerable, attach the protection sheet to the front of the LCD panel before transportation. Protection sheet is used when a LCD panel is supplied as a service spare part.

(3) AVOID VIBRATIONS AND IMPACTS
The unit may be broken if it is toppled sideways even when properly packed. Continuous vibration may shift the gap of the panel, and the unit may not be able to display images properly. Ensure that the unit is carried by at least 2 persons and pay careful attention not to exert any vibration or impact on it.

(4) DO NOT PLACE EQUIPMENT HORIZONTALLY
Ensure that it is placed upright and not horizontally during transportation and storage as the LCD panel is very vulnerable to lateral impacts and may break. During transportation, ensure that the unit is loaded along the traveling direction of the vehicle, and avoid stacking them on one another. For storage, ensure that they are stacked in 2 layers or less even when placed upright.

1.3.2 OPTICAL FILTER (ON THE FRONT OF THE LCD PANEL)

(1) Avoid placing the unit under direct sunlight over a prolonged period of time. This may cause the optical filter to deteriorate in quality and color.

(2) Clean the filter surface by wiping it softly and lightly with a soft and lightly fuzz cloth (such as outing flannel).

(3) Do not use solvents such as benzene or thinner to wipe the filter surface. This may cause the filter to deteriorate in quality or the coating on the surface to come off. When cleaning the filter, usually use the neutral detergent diluted with water. When cleaning the dirty filter, use water-diluted ethanol.

(4) Since the filter surface is fragile, do not scratch or hit it with hard materials. Be careful enough not to touch the front surface, especially when taking the unit out of the packing case or during transportation.

1.3.3 PRECAUTIONS FOR REPLACEMENT OF EXTERIOR PARTS

Take note of the following when replacing exterior parts (REAR COVER, FRONT PANEL, etc.):

(1) Do not exert pressure on the front of the LCD panel (filter surface). It may cause irregular color.

(2) Pay careful attention not to scratch or stain the front of the LCD panel (filter surface) with hands.

(3) When replacing exterior parts, the front (LCD panel) should be placed facing downward. Place a mat, etc. underneath to avoid causing scratches to the front (filter surface).

SECTION 2
SPECIFIC SERVICE INSTRUCTIONS

2.1 SYSTEM SETTEING

Be sure to carry out the following operation at the end of the procedure.

(1) Set to 0 minutes using the **[SLEEP TIMER]** key.
(2) Press the **[VIDEO STATUS]** key and **[DISPLAY]** key simultaneously, then enter the SERVICE MODE.
(3) When the Main Menu is displayed, press **[2]** key to enter the self check mode.
(4) Turn off the power by pressing the **[POWER]** key on the remote control unit.

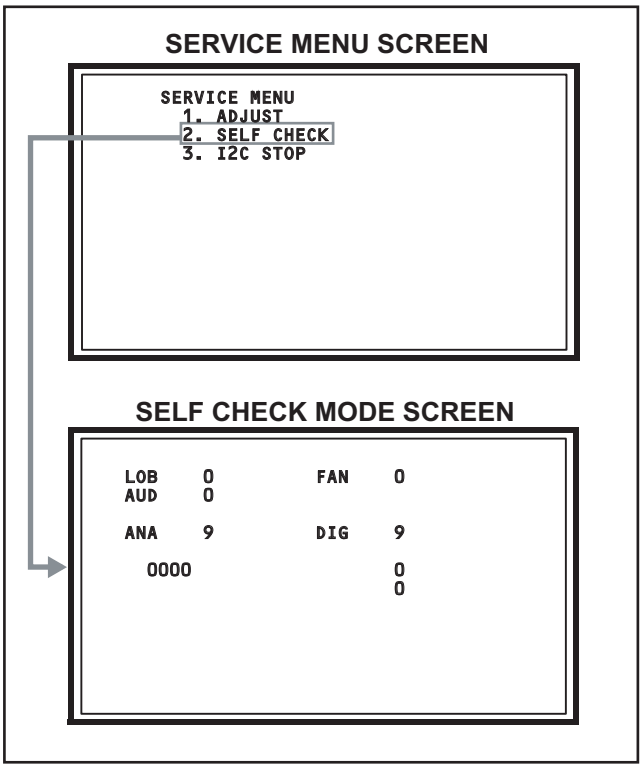

2.2 FEATURES

D.I.S.T. (Digital Image Scaling Technology)
This system uses line interpolation to double the number of scanning lines and achieve high resolution, flicker-free picture.

Color Management
This function ensures dull colors are compensated to produce natural hues.

Picture Management
This function makes it easier to see the dark areas when a picture has many dark areas, and makes it easier to see the bright areas when a picture has many bright areas.

Smart Picture
This function detects the APL (Average Picture Level) and adjusts the contrast suitable for what you are watching.

DIGITAL VNR
This function cuts down the amount of noise in the original picture.

MPEG Noise Reduction
This function effects the block noise removal and mosquito NR simultaneously.

Sensor Effect
With Sensor Effect ON, a "leaf" icon will appear on your TV screen when Smart Sensor brightness adjustment occurs.

2.3 MAIN DIFFERENCE LIST

Item	LT-32X667/Z	LT-32X787/Z	LT-32X887/Z
FRAME COLOR	SILVER	SILVER	BRACK
GRILL COLOR	BRACK	SILVER	BRACK
VIDEO SMART INPUT	NO	YES	←

2.4 TECHNICAL INFORMATION

2.4.1 LCD PANEL

This unit uses the flat type panel LCD (Liquid Crystal Display) panel that occupies as little space as possible, instead of the conventional CRT (Cathode Ray Tube), as a display unit.
Since the unit has the two polarizing filter that are at right angles to each other, the unit adopts "normally black" mode, where light does not pass through the polarizing filter and the screen is black when no voltage is applied to the liquid crystals.

2.4.1.1 SPECIFICATIONS

The following table shows the specifications of this unit.

Item	Specifications
Maximum dimensions (W × H × D)	760 mm × 450 mm × 48 mm
Weight	10.5 kg
Effective screen size	Diagonal: 800 mm (H: 697 mm × V: 392 mm)
Aspect ratio	16 : 9
Drive device / system	a-Si-TFT active matrix system
Resolution	Horizontally 1366 × Vertically 768 × RGB < W-XGA > 3147264 dots in total
Pixel pitch (pixel size)	Horizontally: 0.1703 mm, Vertically: 0.5108 mm
Displayed color	16777216 colors 256 colors for R G and B
Brightness	500cd/m2
Contrast ratio	800 : 1
Response time (Tr + Tf)	less than 18 ms
View angle (Horizontally)	178°
View angle (Vertically)	178°
Surface polarizer	Anti-Glare type Low reflective coat
Color filter	Vertical stripe
Backlight	Cold cathode fluorescent lamp × 18
Power supply voltage in LCD	12 V
Power supply voltage in inverter	24 V
Panel interface system	LVDS (Low Voltage Differential Signaling)

2.4.1.2 PIXEL FAULT

There are three pixel faults - bright fault , dark fault and flicker fault - that are respectively defined as follows.

■ **BRIGHT FAULT**

In this pixel fault, a cell that should not light originally is lighting on and off.
For checking this pixel fault, input ALL BLACK SCREEN and find out the cell that is lighting on and off.

■ **DARK FAULT**

In this pixel fault, a cell that should light originally is not lighting or lighting with the brightness twice as brighter as originally lighting.
For checking this pixel fault, input 100% of each R/G/B color and find out the cell that is not lighting.

■ **FLICKER FAULT**

In the pixel fault, a cell that should light originally or not light originally is flashing on and off.
For checking this pixel fault, input ALL BLACK SCREEN signal or 100% of each RGB color and find out the cell that is flashing on and off.

2.4.2 MAIN CPU PIN FUNCTION [IC7601 : DIGITAL PWB]

Pin	Pin name	I/O	Function	Pin	Pin name	I/O	Function
1	VHOLD1	I	Data slice for main screen closed caption	51	P4.3	O	Not used
2	HFLT1	I/O	LPF for main screen closed caption video input	52	P4.2	O	Not used
3	P9.4	O	Not used	53	P4.1	O	Not used
4	P9.3	O	Not used	54	P4.0	O	Not used
5	DIGR0	O	R [0] for OSD	55	P3.7	O	Not used
6	TB1in	I	AC power for timer clock	56	P3.6	O	Not used
7	REMO	I	Remote control	57	P3.5	O	Not used
8	BYTE	I	Data bus width select [L = 16bit (fixed)]	58	P3.4	O	Not used
9	CNVss	I	CPU programming mode select [Normal = L]	59	P3.3	O	Not used
10	DIGG0	O	G [0] for OSD	60	P3.2	O	Not used
11	DIGB0	O	B [0] for OSD	61	P3.1	O	Not used
12	RESET	I	Reset for main CPU [Reset = L]	62	HSYNC	I	H. sync for OSD
13	Xout	O	System clock osillation (crystal) : 16MHz	63	P3.0	O	Not used
14	Vss	-	GND	64	VSYNC	I	V. sync for OSD
15	Xin	I	System clock osillation (crystal) : 16MHz	65	P2.7	O	Not used
16	Vcc1	I	3.3V stand-by power supply	66	P2.6	O	Not used
17	OSC1	I	Clock for OSD	67	P2.5	O	Not used
18	OSC2	O	Not used : Clock for OSD	68	P2.4	O	Not used
19	INT1	I	Not used : AV COMPULINK control	69	P2.3	O	Not used
20	INT0	I	Request for sub(chassis) CPU communication (serial data)	70	P2.2	O	Not used
21	OUT1	O	Ys (blanking) for OSD	71	P2.1	O	Clock for Inter IC (serial) bus control
22	OUT2	O	YM (transparence) for OSD	72	P2.0	I/O	Data for Inter IC (serial) bus control
23	P7.7	O	Not used	73	P1.7	O	Not used
24	P7.6	O	Not used	74	P1.6	O	Not used
25	P7.5	O	Not used	75	P1.5	O	Not used
26	P7.4	O	Not used	76	P1.4	O	Not used
27	CTA2/RTS2	O	Not used	77	P1.3	O	Not used
28	CLK2	O	Not used	78	P1.2	O	Not used
29	RxD2	I	Digital tuner control	79	P1.1	O	Not used
30	TxD2	O	Digital tuner control	80	P1.0	O	Function LED lighting
31	SDA2	I/O	Not used	81	P0.7	O	Communication LED lighting
32	DIGR1	O	R [1] for OSD	82	P0.6	O	Test point
33	DIGG1	O	G [1] for OSD	83	CEC_INT	O	Not used
34	DIGB1	O	B [1] for OSD	84	WAKE	O	Reset for sub(chassis) CPU
35	TxD0	I	Data receive (serial) for external programming	85	CARD_DET	I	Not used
36	RxD0	O	Data transmission (serial) for external programming	86	POWER_SW	I	Power switch (mechanical) detection
37	CLK0	I	Clock for external programming	87	SDA	I/O	Data for Inter IC (serial) bus control : memory
38	RTS0	O	Busy for external programming [Operation = H]	88	SCL	O	Clock for Inter IC (serial) bus control : memory
39	P5.7	I	Not used	89	DIGR2	O	R [2] for OSD
40	P5.6	O	Not used	90	DIGG2	O	G [2] for OSD
41	HOLD	I	CPU programming mode select [Normal = H]	91	DIGB2	O	B [2] for OSD
42	P5.4	O	Not used	92	10.0	O	Not used
43	P5.3	O	Not used	93	KEY2	I	Key scan data for front control button (MENU/CH+/CH-) KEY2
44	P5.2	O	Not used	94	KEY1	I	Key scan data for front control button (INPUT/VOL+/VOL-) KEY1
45	P5.1	O	Not used	95	VHOLD2	I	Data slice for sub screen closed caption
46	WR	O	CPU programming mode select [Normal = L]	96	HLF2	I/O	LPF for sub screen closed caption video input
47	P4.7	O	Data transmission for sub(chassis) CPU communication (serial)	97	CVIN2	I	Video(Y) for sub screen closed caption
48	P4.6	I	Data receive for sub(chassis) CPU communication (serial)	98	TVSETB	I	Test terminal [L Fixed]
49	P4.5	I	Clock for sub(chassis) CPU communication (serial)	99	VCCE	I	5V stand-by power supply
50	P4.4	O	Not used	100	CVIN1	I	Video(Y) for main screen closed caption

SECTION 3
DISASSEMBLY

3.1 DISASSEMBLY PROCEDURE

CAUTION AT DISASSEMBLY:

- **Be sure to perform the SYSTEM SETTEING, at the end of the procedure.**
- Make sure that the power cord is disconnected from the outlet.
- Pay special attention not to break or damage the parts.
- When removing each board, remove the connectors as required. Taking notes of the connecting points (connector numbers) makes service procedure manageable.
- Make sure that there is no bent or stain on the connectors before inserting, and firmly insert the connectors.

3.1.1 REMOVING THE STAND (Fig.1)

(1) Remove the 2 screws **[A]**.
(2) Remove the STAND COVER.
(3) Remove the 4 screws **[B]**.
(4) Remove the STAND.

3.1.2 REMOVING THE REAR COVER (Fig.1)

- Remove the STAND.
  (1) Remove the JACK COVER (L/R).
  (2) Remove the 7 screws **[C]**, the 5 screws **[D]**, and the 1 screw **[E]**.
  (3) Remove the REAR COVER.

3.1.3 REMOVING THE POWER PWB (Fig.1)

- Remove the STAND.
- Remove the REAR COVER.
  (1) Remove the 1 screw **[F]**.
  (2) Remove the POWER CORD HOLDER.
  (3) Remove the POWER CORD.
  (4) Remove the 4 screws **[G]**.
  (5) Remove the POWER PWB.

3.1.4 REMOVING THE D-AMP PWB (Fig.1)

- Remove the STAND.
- Remove the REAR COVER.
  (1) Remove the 2 screw **[H]**.
  (2) Remove the D-AMP PWB.

3.1.5 REMOVING THE ANALOG PWB (Fig.1)

- Remove the STAND.
- Remove the REAR COVER.
- Remove the D-AMP PWB.
  (1) Remove the 2 screws **[J]** and 2 screws **[K]**.
  (2) Remove the TERMINAL BASE.
  (3) Remove the 1 screw **[L]**.
  (4) Remove the TUNER BASE.
  (5) Remove the 2 screws **[M]**.
  (6) Remove the D-AMP BRACKET.
  (7) Remove the 3 screws **[N]**.
  (8) Remove the 2 screws **[P]**.
  (9) Remove the ANALOG PWB.

3.1.6 REMOVING THE DC-DC PWB (Fig.1)

- Remove the STAND.
- Remove the REAR COVER.
  (1) Remove the 4 screws **[Q]**.
  (2) Remove the BACK BRACKET.
  (3) Remove the 2 screws **[R]**.
  (4) Remove the DC-DC PWB.

3.1.7 REMOVING THE COOLING FAN (Fig.1)

- Remove the STAND.
- Remove the REAR COVER.
- Remove the BACK BRACKET.
  (1) Remove the 7 hooks of the SHIELD COVER.
  (2) Remove the SHIELD COVER by sliding it in the direction of the arrow.
  (3) Remove the 2 screws **[S]**.
  (4) Remove the COOLING FAN.

3.1.8 REMOVING THE ATSC TUNER MODULE PWB (Fig.1)

- Remove the STAND.
- Remove the REAR COVER.
- Remove the BACK BRACKET.
- Remove the SHIELD COVER.
  (1) Remove the 4 screws **[T]**.
  (2) Remove the ATSC TUNER MODULE PWB.

3.1.9 REMOVING THE OPTICAL PWB (Fig.1)

- Remove the STAND.
- Remove the REAR COVER.
- Remove the BACK BRACKET.
- Remove the SHIELD COVER.
  (1) Remove the 1 screw **[U]**.
  (2) Remove the OPTICAL PWB.

3.1.10 REMOVING THE SD CARD PWB (Fig.1)

- Remove the STAND.
- Remove the REAR COVER.
- Remove the BACK BRACKET.
- Remove the SHIELD COVER.
  (1) Remove the 1 screw **[V]**.
  (2) Remove the SD CARD PWB.

3.1.11 REMOVING THE DIGITAL PWB (Fig.1)

- Remove the STAND.
- Remove the REAR COVER.
- Remove the BACK BRACKET.
- Remove the SHIELD COVER.
- Remove the ATSC TUNER MODULE PWB.
- Remove the SD CARD PWB.
  (1) Remove the 2 screws **[W]** and 2 screws **[X]**.
  (2) Remove the SHIELD TERMINAL.
  (3) Remove the 7 screws **[Y]**.
  (4) Remove the DIGITAL PWB BRACKET.
  (5) Remove the 2 screws **[Z]**.
  (6) Remove the DIGITAL PWB.

CAUTION :

Make sure to perform the "SYSTEM SETTEING", when DIGITAL PWB is replaced.

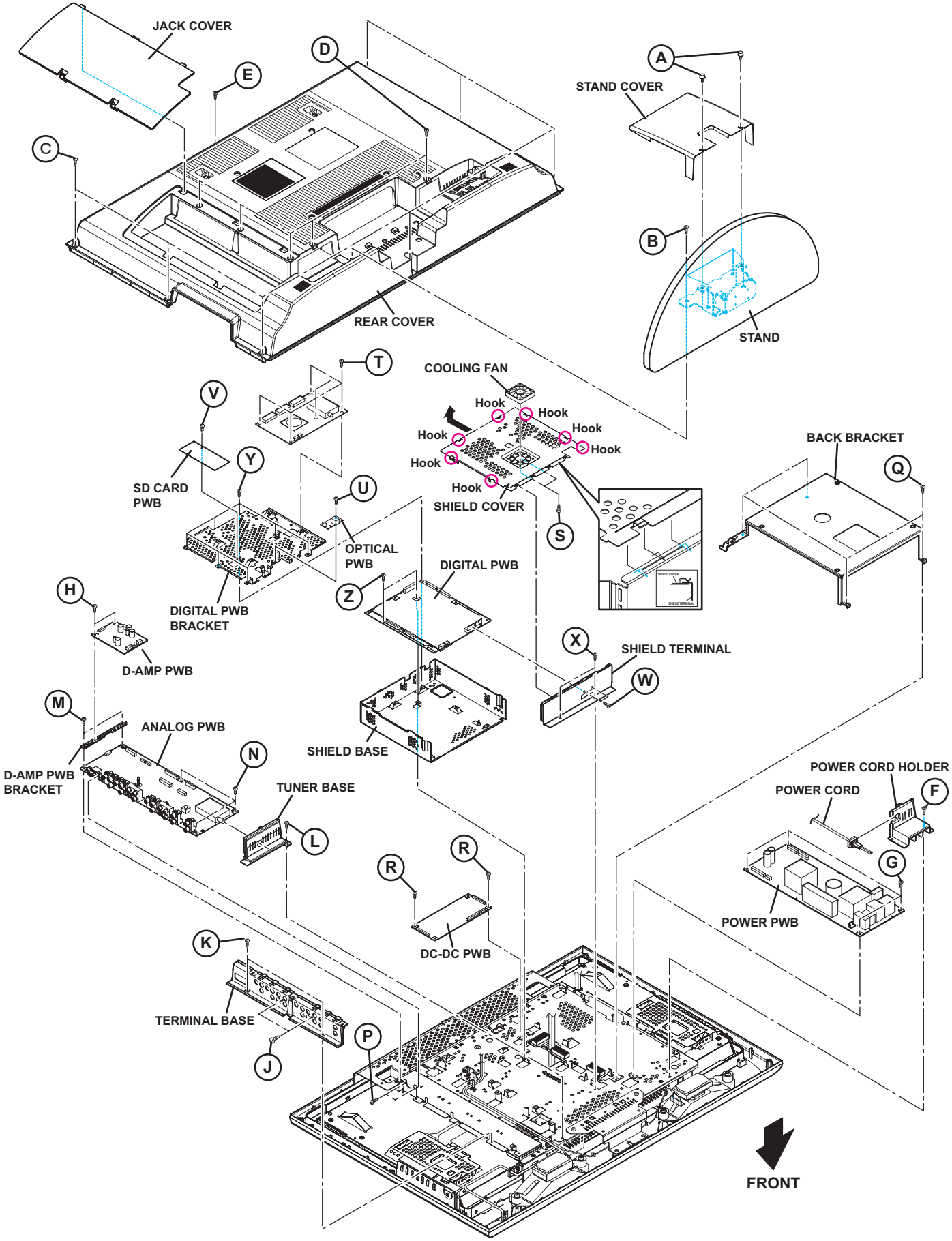
JACK COVER
E
D
C
REAR COVER
A
STAND COVER
B
STAND
T
COOLING FAN
V
Hook
Hook
Hook
Hook
Hook
Hook
Hook
SD CARD
PWB
Y
U
OPTICAL
PWB
SHIELD COVER
S
BACK BRACKET
Q
DIGITAL PWB
DIGITAL PWB
BRACKET
Z
H
D-AMP PWB
X
SHIELD TERMINAL
W
M
ANALOG PWB
SHIELD BASE
D-AMP PWB
BRACKET
N
TUNER BASE
L
POWER CORD HOLDER
POWER CORD
F
G
POWER PWB
R
R
DC-DC PWB
K
TERMINAL BASE
J
P
FRONT

Fig.1

3.1.12 REMOVING THE SW PWB (Fig.2)

- Remove the STAND.
- Remove the REAR COVER.
  (1) Remove the 2 screws **[A]**.
  (2) Remove the CONTROL ASS'Y with SW PWB.
  (3) Remove the 2 screws **[B]**.
  (4) Remove the SW PWB from the CONTROL ASS'Y.

3.1.13 REMOVING THE LED PWB (Fig.2)

- Remove the STAND.
- Remove the REAR COVER.
  (1) Remove the 2 screws **[C]**.
  (2) Remove the LED PWB.

3.1.14 REMOVING THE SPEAKER (Fig.2)

- Remove the STAND.
- Remove the REAR COVER.
  (1) Remove the 4 screws **[D]**.
  (2) Remove the SPEAKER (L / R).

3.1.15 REMOVING THE LCD PANEL UNIT (Fig.2)

- Remove the STAND.
- Remove the REAR COVER.
- Remove the BACK BRACKET.
- Remove the POWER CORD HOLDER.
  (1) Remove the 3 screws **[E]** and 2 screws **[L]**.
  (2) Remove the STAND BRACKET.
  (3) Remove the 3 screws **[F]**.
  (4) Remove the MAIN BASE.
  (5) Remove the 4 screws **[G]** and 4 screw **[H]**.
  (6) Remove the LCD PANEL UNIT with TOP/BOTTOM FRAME.
  (7) Remove the 2 screws **[J]**.
  (8) Remove the TOP FARAME from the LCD PANEL UNIT.
  (9) Remove the 2 screws **[K]**.
  (10) Remove the BOTTOM FARAME from the LCD PANEL UNIT.

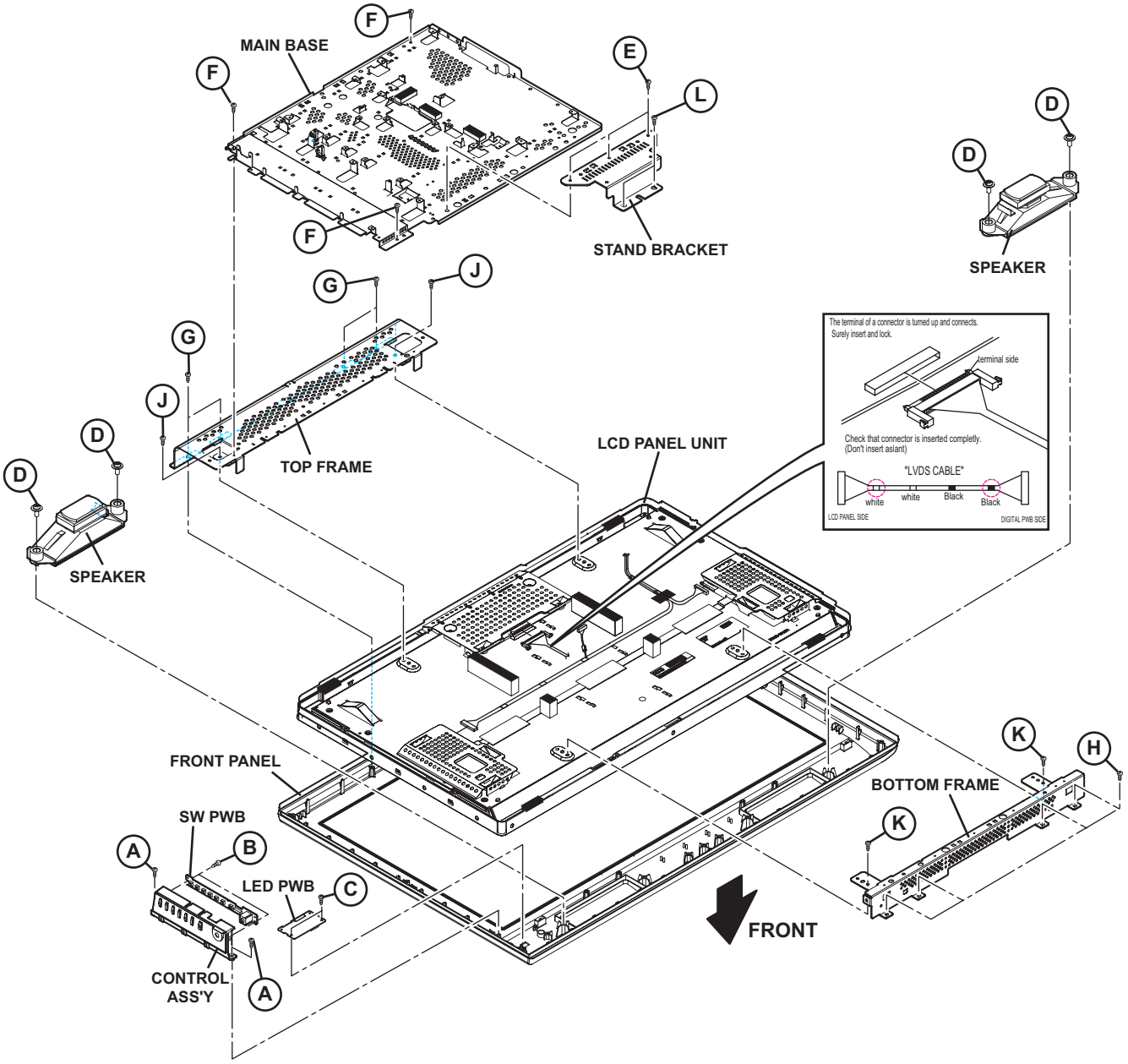

Fig.2

3.1.16 REMOVING THE CONTROL PWB (Fig.3)

- Remove the STAND.
- Remove the REAR COVER.
- Remove the BACK BRACKET.
- Remove the POWER CORD HOLDER.
- Remove the LCD PANEL UNIT.
  (1) Remove the 4 screws **[A]**.
  (2) Remove the CONTROL PWB COVER.
  (3) Remove the CONTROL PWB.

3.1.17 REMOVING THE INVERTER PWB (MASTER) (Fig.3)

- Remove the STAND.
- Remove the REAR COVER.
- Remove the BACK BRACKET.
- Remove the POWER CORD HOLDER.
- Remove the LCD PANEL UNIT.
  (1) Remove the 3 screws **[B]**.
  (2) Remove the INVERTER PWB COVER.
  (3) Remove the INVERTER PWB (MASTER).

3.1.18 REMOVING THE INVERTER PWB (SLAVE) (Fig.3)

- Remove the STAND.
- Remove the REAR COVER.
- Remove the BACK BRACKET.
- Remove the POWER CORD HOLDER.
- Remove the LCD PANEL UNIT.
  (1) Remove the 3 screws **[C]**.
  (2) Remove the INVERTER PWB COVER.
  (3) Remove the INVERTER PWB (SLAVE).

3.1.19 REMOVING THE BACKLIGHT UNIT (Fig.3)

- Remove the STAND.
- Remove the REAR COVER.
- Remove the BACK BRACKET.
- Remove the POWER CORD HOLDER.
- Remove the LCD PANEL UNIT.
  (1) Remove the 6 screws **[D]**.
  (2) Remove the 6 hooks.
  (3) Remove the PANEL FRAME.
  (4) Remove the LCD PANEL from the BACKLIGHT UNIT.

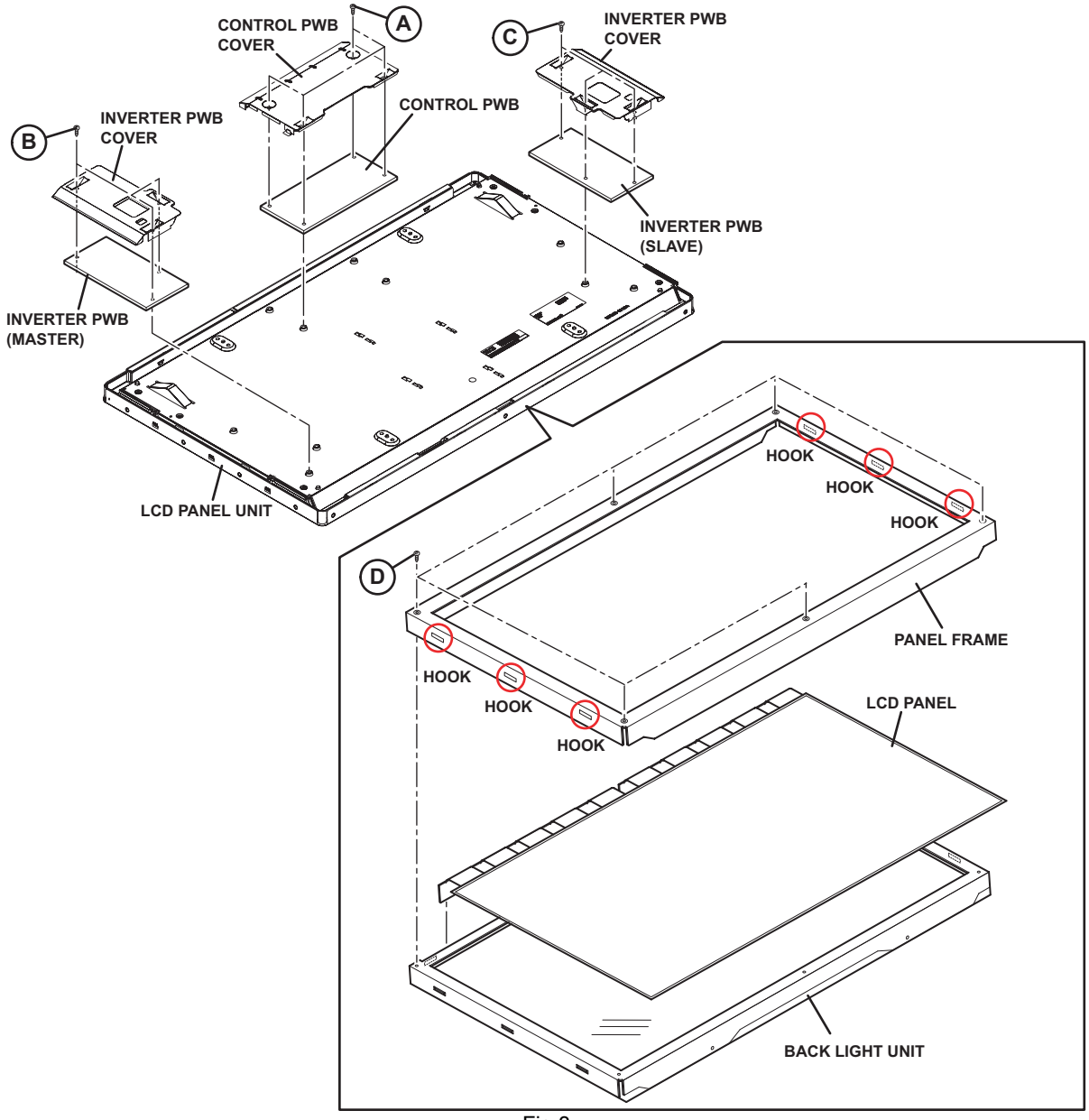

Fig.3

3.2 MEMORY IC REPLACEMENT

- This model uses the memory IC.
- This memory IC stores data for proper operation of the video and drive circuits.
- When replacing, be sure to use an IC containing this (initial value) data.

3.2.1 MEMORY IC TABLE

Simbol	Number of pins	Mounting PWB	Main content of data
IC7201	48-pin	DIGITAL PWB	Progaram(Video process) of IC6001(System CPU) is memorized.
IC7602	8-pin	DIGITAL PWB	Setting value of IC7601(MAIN CPU) is memorized.

3.2.2 MEMORY IC REPLACEMENT PROCEDURE

1. Power off
Switch off the power and disconnect the power plug from the AC outlet.

2. Replace the memory IC
Be sure to use the memory IC written with the initial setting values.

3. Power on
Connect the power plug to the AC outlet and switch on the power.

4. Receiving channel setting
Refer to the OPERATING INSTRUCTIONS and set the receive channels (Channels Preset) as described.

5. User setting
Check the user setting items according to the given in page later. Where these do not agree, refer to the OPERATING INSTRUCTIONS and set the items as described.

6. SERVICE MODE setting
Verify what to set in the SERVICE MODE, and set whatever is necessary (Fig.1). Refer to the SERVICE ADJUSTMENT for setting.

3.2.3 SERVICE MODE SETTING

■SERVICE MODE SCREEN

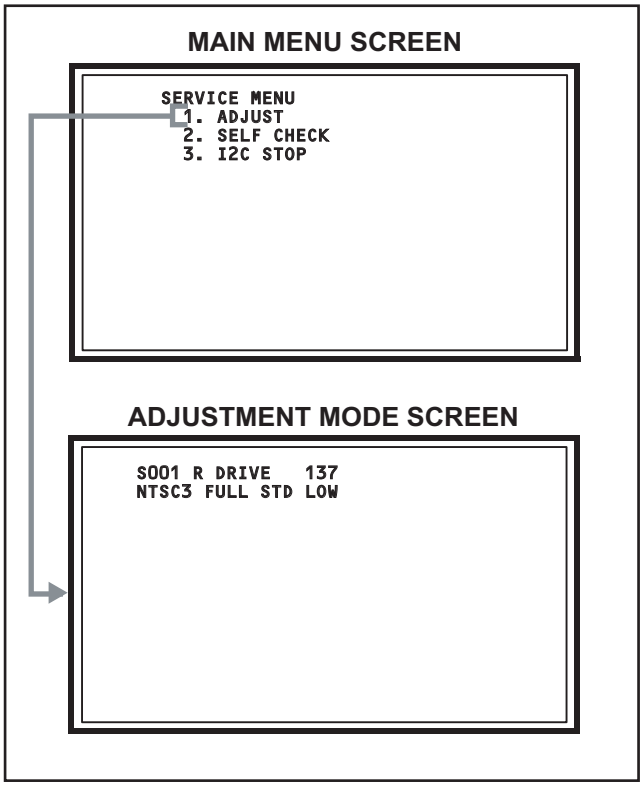

Fig.1

■SETTING ITEM

Setting items	Settings	Item No.
Video system setting	Adjust	S001 - S009
Audio system setting	Adjust	T001 - T003
Main CPU system setting	Fixed	M001 - M224
Drive system setting	Fixed	F001 - F002
(Not used)	Fixed	D001
(Not used)	Fixed	Z001

3.2.4 SETTINGS OF FACTORY SHIPMENT

3.2.4.1 BUTTON OPERATION

Setting item	Setting position
POWER	Off
CHANNEL	CABLE-02
VOLUME	10
INPUT	TV

3.2.4.2 REMOTE CONTROL DIRECT OPERATION

Setting item		Setting position
INPUT		TV
CHANNEL		CABLE-02
VOLUME		10
MUTING		OFF
DISPLAY		OFF
ASPECT	NTSC	PANORAMA
	HD / ATSC	FULL
SLEEP TIMER		OFF
THEATER PRO		OFF
NATURAL CINEMA		AUTO
VIDEO STATUS		DYNAMIC
MTS		STEREO
SOUND EFFECT	A.H.S.+	OFF
	A.T.C	ON
	SMART SOUND	OFF
	HYPER BASS	OFF

3.2.4.3 REMOTE CONTROL MENU OPERATION

1. PICTURE ADJUST

Customers can adjust the picture setting of menu screen as their own like but the picture standard value during factory shipment is as below.

< NTSC MODE >

Setting item	DYNAMIC	STANDARD	GAME	THEATER
PICTURE	+09	00	-10	00
BRIGHT	00	00	00	00
COLOR	00	00	00	00
TINT	00	00	00	00
DETAIL	+06	00	00	00
ENERGY SAVER MODE	+30	+15	00	-10
COLOR TEMPERATURE	HIGH	LOW	HIGH	HIGH
COLOR MANAGEMENT	ON	ON	ON	ON
DYNAMIC GAMMA	ON	ON	ON	ON
SMART PICTURE	OFF	ON	ON	ON
DIGITAL VNR	AUTO	AUTO	AUTO	AUTO
MPEG NR	ON	ON	ON	ON
SMART SENSOR	OFF	OFF	OFF	OFF
SENSOR EFFECT	OFF	OFF	OFF	OFF

< HD MODE >

Setting item	DYNAMIC	STANDARD	GAME	THEATER
PICTURE	+10	00	-10	00
BRIGHT	+01	00	00	00
COLOR	+02	00	00	00
TINT	00	00	00	00
DETAIL	+07	00	00	00
ENERGY SAVER MODE	+30	+15	00	-10
COLOR TEMPERATURE	HIGH	LOW	HIGH	LOW
COLOR MANAGEMENT	ON	ON	ON	ON
DYNAMIC GAMMA	ON	ON	ON	ON
SMART PICTURE	OFF	ON	ON	ON
DIGITAL VNR	AUTO	AUTO	AUTO	AUTO
MPEG NR	ON	ON	ON	ON
SMART SENSOR	OFF	OFF	OFF	OFF
SENSOR EFFECT	OFF	OFF	OFF	OFF

2. SOUND ADJUST

Setting item	Setting position
BASS	00
TREBLE	00
BALANCE	00
TURN ON VOLUME	Current
VOLUME LIMIT	50

3. CLOCK / TIMERS

Setting item	Setting position
ON / OFF TIMER	OFF

4. INITIAL SETUP

Setting item	Setting position
DIGITAL-IN	AUTO
DIGITAL-IN1 AUDIO	AUTO
NOISE MUTING	ON
FRONT PANEL LOCK	OFF
V1 SMART INPUT	OFF
VIDEO INPUT LABEL	All blank
POSITION ADJUSTMENT	Center
POWER INDICATOR	HIGH
LANGUAGE	ENG.
CLOSED CAPTION	OFF
AUTO SHUT OFF	OFF
XDS ID	ON
V-CHIP	OFF

3.3 REPLACEMENT OF CHIP COMPONENT

3.3.1 CAUTIONS

(1) Avoid heating for more than 3 seconds.
(2) Do not rub the electrodes and the resist parts of the pattern.
(3) When removing a chip part, melt the solder adequately.
(4) Do not reuse a chip part after removing it.

3.3.2 SOLDERING IRON

(1) Use a high insulation soldering iron with a thin pointed end of it.
(2) A 30w soldering iron is recommended for easily removing parts.

3.3.3 REPLACEMENT STEPS

1. How to remove Chip parts

[Resistors, capacitors, etc.]

(1) As shown in the figure, push the part with tweezers and alternately melt the solder at each end.

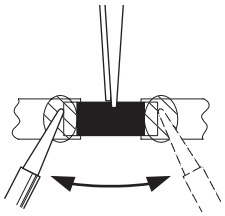

(2) Shift with the tweezers and remove the chip part.

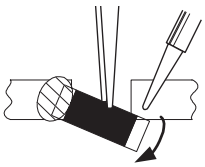

[Transistors, diodes, variable resistors, etc.]

(1) Apply extra solder to each lead.

(2) As shown in the figure, push the part with tweezers and alternately melt the solder at each lead. Shift and remove the chip part.

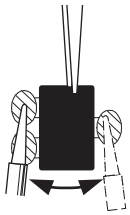

NOTE :
After removing the part, remove remaining solder from the pattern.

2. How to install Chip parts

[Resistors, capacitors, etc.]

(1) Apply solder to the pattern as indicated in the figure.

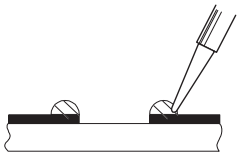

(2) Grasp the chip part with tweezers and place it on the solder. Then heat and melt the solder at both ends of the chip part.

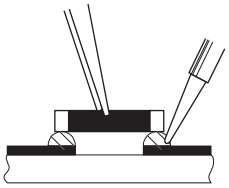

[Transistors, diodes, variable resistors, etc.]

(1) Apply solder to the pattern as indicated in the figure.
(2) Grasp the chip part with tweezers and place it on the solder.
(3) First solder lead **A** as indicated in the figure.

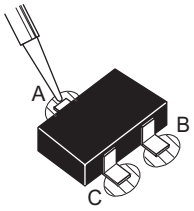

(4) Then solder leads **B** and **C**.

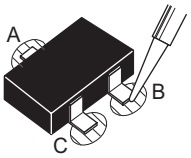

SECTION 4
ADJUSTMENT

4.1 ADJUSTMENT PREPARATION

(1) **There are 2 ways of adjusting this TV : One is with the REMOTE CONTROL UNIT and the other is the conventional method using adjustment parts and components.**
(2) **The adjustment using the REMOTE CONTROL UNIT is made on the basis of the initial setting values. The setting values which adjust the screen to the optimum condition can be different from the initial setting values.**
(3) Make sure that connection is correctly made AC to AC power source.
(4) Turn on the power of the TV and measuring instruments for warning up for at least 30 minutes before starting adjustments.
(5) If the receive or input signal is not specified, use the most appropriate signal for adjustment.
(6) Never touch the parts (such as variable resistors, transformers and condensers) not shown in the adjustment items of this service adjustment.

4.2 PRESET SETTING BEFORE ADJUSTMENTS

Unless otherwise specified in the adjustment items, preset the following functions with the REMOTE CONTROL UNIT.

Setting item	Settings
VIDEO STATUS	STANDARD
BRIGHT / CONTRAST / COLOR / TINT	00
COLOR TEMPERATURE	LOW
DIG. NOISE CLEAR	OFF
COLOR MANAGEMENT	ON
NATURAL CINEMA	OFF
TREBLE / BASS / BALANCE	00
SMART SOUND	OFF
MTS	STEREO
A.H.S.+	OFF
HYPER BASS	OFF
ASPECT	FULL

4.3 MEASURING INSTRUMENT AND FIXTURES

- Signal generator (Pattern generator) [NTSC]
- TV audio multiplex signal generator
- Remote control unit

4.4 ADJUSTMENT ITEMS

■ **VIDEO CIRCUIT**
- WHITE BALANCE (HIGHLIGHT) adjustment

■ **MTS CIRCUIT**
- MTS INPUT LEVEL adjustment
- MTS SEPARATION adjustment

4.5 BASIC OPERATION OF SERVICE MODE

4.5.1 HOW TO ENTER THE SERVICE MODE

(1) Set to 0 minutes using the **[SLEEP TIMER]** key.
(2) Press the **[VIDEO STATUS]** key and **[DISPLAY]** key simultaneously, then enter the SERVICE MODE (Fig.1)

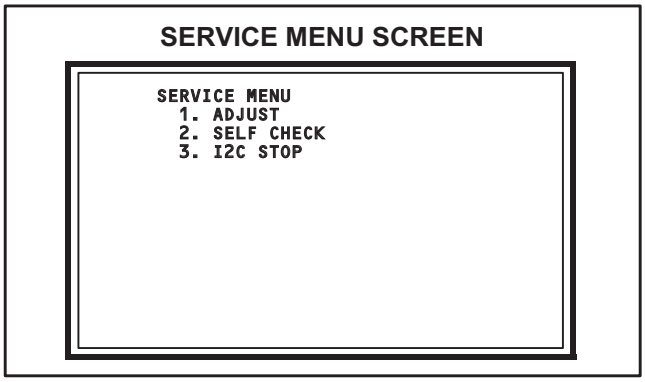

Fig.1

NOTE:
- Before entering the SERVICE MODE, confirm that the setting of **TV/CATV** switch of the REMOTE CONTROL UNIT is at the "TV" side and the setting of **VCR/DVD** switch is at the "**VCR**" side. If the switches have not been properly set, you cannot enter the SERVICE MODE.
- When a number key other than the **[1]** keys is pressed in the SERVICE MENU SCREEN, the other relevant screen may be displayed.
  This is not used in the adjustment procedure. Press the **[MENU]** key to return to the SERVICE MENU SCREEN.

4.5.2 HOW TO EXIT THE SERVICE MODE

Press the **[BACK]** key to exit the Service mode.

4.5.3 SERVICE MODE SELECT KEY LOCATION

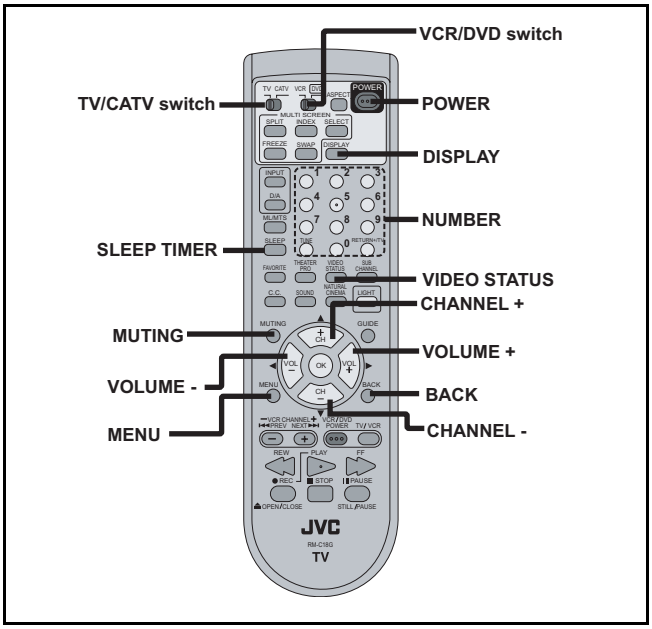

4.5.4 ADJUSTMENT MODE

This mode is used to adjust the VIDEO CIRCUIT and the MTS CIRCUIT.

4.5.4.1 HOW TO ENTER THE ADJUSTMENT MODE

When the SERVICE MENU SCREEN of SERVICE MODE is displayed, press **[1]** key to enter the **ADJUSTMENT MODE**.

4.5.4.2 DESCRIPTION OF STATUS DISPLAY OF ADJUSTMENT MODE

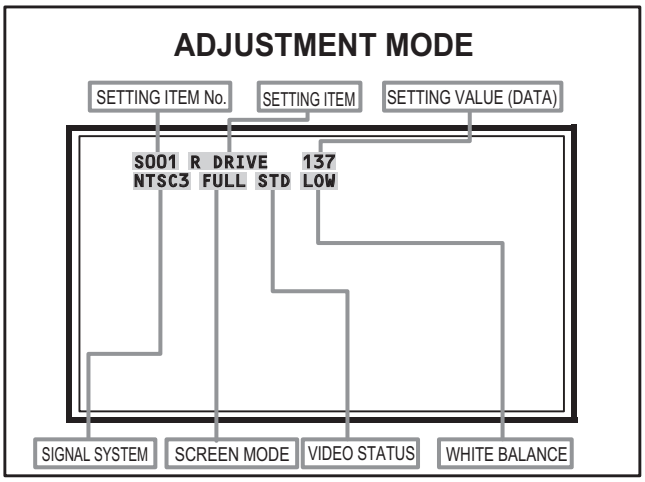

Fig.2

(1) SIGNAL SYSTEM

The signal displayed on the screen is displayed.

NTSC3	: 525i (Composite / S-video input)
525I	: 525i (Component input)
525P	: 525p
1125I6	: 1125i
750P	: 750p
PCVGA	: PC (VGA)
PCXGA	: PC (XGA)
H525I	: HDMI 525i
H525P	: HDMI 525p
H125I6	: HDMI 1125i
H750P	: HDMI 750p
D525I	: ATSC 525i
D525P	: ATSC 525p
D125I6	: ATSC 1125i

(2) SCREEN MODE

State of the SCREEN SIZE or MULTI PICTURE is displayed.

SINGLE SCREEN

FULL	: FULL
1609	: CINEMA, CINEMA ZOOM
PANO	: PANORAMA, HD PANORAMA
REGU	: REGULAR, SLIM

MULTI SCREEN

M2	: SPLIT, FREEZE screen
M12	: INDEX screen

(3) VIDEO STATUS

STD	: STANDARD
DYN	: DYNAMIC
TH	: THEATER
GAME	: GAME

(4) WHITE BALANCE

HIGH	: HIGH
LOW	: LOW

(5) SETTING ITEM NAME

Setting item name are displayed. The setting item numbers to be displayed are listed below.

Item No.	Setting item
S001 - S009	Video system setting
T001 - T003	Audio system setting
M001 - M224	Main CPU system setting
F001 - F002	Drive system setting
D001	(NOT USED)
Z001	(NOT USED)

(6) SETTING ITEM NO.

Setting item numbers are displayed. For the setting item names to be displayed, refer to "Initial setting value of adjustment mode".

(7) SETTING VALUE (DATA)

The SETTING VALUE is displayed.

4.5.4.3 CHANGE AND MEMORY OF SETTING VALUE

■SELECTION OF SETTING ITEM

- **[CH+]** / **[CH-]** key.
  Change the setting items up/ down.

S001... ↔ T001... ↔ M001... ↔ F001... ↔ D001... ↔ Z001...

- **[SLEEP TIMER]** key.
  Switches to the next items.

S001 → T001 → M001... → F001... → D001 → Z001

■CHANGE OF SETTING VALUE (DATA)

- **[VOL+]** / **[VOL-]** key.
  Change the setting values up/down.

■MEMORY OF SETTING VALUE (DATA)

Changed setting value is memorized by pressing **[MUTING]** key.

4.6 INITIAL SETTING VALUES IN THE SERVICE MODE

- Perform fine-tuning based on the "initial values" using the remote control when in the Service mode.
- The "initial values" serve only as an indication rough standard and therefore the values with which optimal display can be achieved may be different from the default values. But, don't change the values that are not written in "ADJUSTMENT PROCEDURE". They are fixed values.

4.6.1 VIDEO SYSTEM SETTING

Item No.	Item	Variable range	Setting value
S001	R DRIVE	000 - 255	137
S002	G DRIVE	000 - 255	121
S003	B DRIVE	000 - 255	108
S004	RESREV	000 - 255	000
S005	RESREV	000 - 255	000
S006	RESREV	000 - 255	002
S007	RESREV	000 - 255	002
S008	RESREV	000 - 255	002
S009	RESREV	000 - 255	002

4.6.2 AUDIO SYSTEM SETTING

Item No.	Item	Variable range	Setting value
T001	INPLEVEL	000 - 015	006
T002	LOWSEPA	000 - 063	034
T003	HIGHSEPA	000 - 063	013

4.6.3 MAIN CPU SYSTEM SETTING (Fixed values)

Item No.	Item	Variable range	Setting value
M001	1E00	00 - FF	00
M002	1E01	00 - FF	00
M003	1E02	00 - FF	05
M004	1E03	00 - FF	20
M005	1E04	00 - FF	10
M006	1E05	00 - FF	00
M007	1E06	00 - FF	00
M008	1E07	00 - FF	01
M009	1E08	00 - FF	00
M010	1E09	00 - FF	00
M011	1E0A	00 - FF	01
M012	1E0B	00 - FF	00
M013	1E0C	00 - FF	01
M014	1E0D	00 - FF	00
M015	1E0E	00 - FF	00
M016	1E0F	00 - FF	00
M017	1E10	00 - FF	01
M018	1E11	00 - FF	00
M019	1E12	00 - FF	00
M020	1E13	00 - FF	01
M021	1E14	00 - FF	00
M022	1E15	00 - FF	00
M023	1E16	00 - FF	00
M024	1E17	00 - FF	00
M025	1E18	00 - FF	00
M026	1E19	00 - FF	00
M027	1E1A	00 - FF	00
M028	1E1B	00 - FF	00
M029	1E1C	00 - FF	00
M030	1E1D	00 - FF	00
M031	1E1E	00 - FF	00
M032	1E1F	00 - FF	00
M033	1E20	00 - FF	00
M034	1E21	00 - FF	00
M035	1E22	00 - FF	00
M036	1E23	00 - FF	00
M037	1E24	00 - FF	00
M038	1E25	00 - FF	00
M039	1E26	00 - FF	00
M040	1E27	00 - FF	00
M041	1E28	00 - FF	00
M042	1E29	00 - FF	00
M043	1E2A	00 - FF	00
M044	1E2B	00 - FF	00
M045	1E2C	00 - FF	00
M046	1E2D	00 - FF	00
M047	1E2E	00 - FF	00
M048	1E2F	00 - FF	00
M049	1E30	00 - FF	00
M050	1E31	00 - FF	00
M051	1E32	00 - FF	00
M052	1E33	00 - FF	00
M053	1E34	00 - FF	00
M054	1E35	00 - FF	00
M055	1E36	00 - FF	02
M056	1E37	00 - FF	00
M057	1E38	00 - FF	01
M058	1E39	00 - FF	02
M059	1E3A	00 - FF	10
M060	1E3B	00 - FF	83
M061	1E3C	00 - FF	00
M062	1E3D	00 - FF	00
M063	1E3E	00 - FF	00
M064	1E3F	00 - FF	00
M065	1E40	00 - FF	00
M066	1E41	00 - FF	00

Item No.	Item	Variable range	Setting value
M067	1E42	00 - FF	00
M068	1E43	00 - FF	03
M069	1E44	00 - FF	03
M070	1E45	00 - FF	03
M071	1E46	00 - FF	3F
M072	1E47	00 - FF	01
M073	1E48	00 - FF	00
M074	1E49	00 - FF	00
M075	1E4A	00 - FF	00
M076	1E4B	00 - FF	00
M077	1E4C	00 - FF	00
M078	1E4D	00 - FF	00
M079	1E4E	00 - FF	00
M080	1E4F	00 - FF	00
M081	1E50	00 - FF	00
M082	1E51	00 - FF	00
M083	1E52	00 - FF	00
M084	1E53	00 - FF	00
M085	1E54	00 - FF	00
M086	1E55	00 - FF	00
M087	1E56	00 - FF	00
M088	1E57	00 - FF	00
M089	1E58	00 - FF	00
M090	1E59	00 - FF	00
M091	1E5A	00 - FF	00
M092	1E5B	00 - FF	00
M093	1E5C	00 - FF	00
M094	1E5D	00 - FF	00
M095	1E5E	00 - FF	00
M096	1E5F	00 - FF	00
M097	1E60	00 - FF	00
M098	1E61	00 - FF	00
M099	1E62	00 - FF	00
M100	1E63	00 - FF	00
M101	1E64	00 - FF	00
M102	1E65	00 - FF	00
M103	1E66	00 - FF	00
M104	1E67	00 - FF	00
M105	1E68	00 - FF	04
M106	1E69	00 - FF	03
M107	1E6A	00 - FF	02
M108	1E6B	00 - FF	00
M109	1E6C	00 - FF	00
M110	1E6D	00 - FF	00
M111	1E6E	00 - FF	00
M112	1E6F	00 - FF	00

Item No.	Item	Variable range	Setting value
M113	1E70	00 - FF	00
M114	1E71	00 - FF	00
M115	1E72	00 - FF	00
M116	1E73	00 - FF	00
M117	1E74	00 - FF	00
M118	1E75	00 - FF	00
M119	1E76	00 - FF	00
M120	1E77	00 - FF	0F
M121	1E78	00 - FF	13
M122	1E79	00 - FF	00
M123	1E7A	00 - FF	00
M124	1E7B	00 - FF	00
M125	1E7C	00 - FF	00
M126	1E7D	00 - FF	00
M127	1E7E	00 - FF	01
M128	1E7F	00 - FF	00
M129	1E80	00 - FF	01
M130	1E81	00 - FF	00
M131	1E82	00 - FF	01
M132	1E83	00 - FF	00
M133	1E84	00 - FF	00
M134	1E85	00 - FF	00
M135	1E86	00 - FF	00
M136	1E87	00 - FF	00
M137	1E88	00 - FF	00
M138	1E89	00 - FF	00
M139	1E8A	00 - FF	00
M140	1E8B	00 - FF	00
M141	1E8C	00 - FF	00
M142	1E8D	00 - FF	00
M143	1E8E	00 - FF	00
M144	1E8F	00 - FF	00
M145	1E90	00 - FF	00
M146	1E91	00 - FF	00
M147	1E92	00 - FF	00
M148	1E93	00 - FF	00
M149	1E94	00 - FF	00
M150	1E95	00 - FF	00
M151	1E96	00 - FF	00
M152	1E97	00 - FF	00
M153	1E98	00 - FF	00
M154	1E99	00 - FF	00
M155	1E9A	00 - FF	01
M156	1E9B	00 - FF	00
M157	1E9C	00 - FF	03
M158	1E9D	00 - FF	00

Item No.	Item	Variable range	Setting value
M159	1E9E	00 - FF	00
M160	1E9F	00 - FF	00
M161	1EA0	00 - FF	00
M162	1EA1	00 - FF	00
M163	1EA2	00 - FF	00
M164	1EA3	00 - FF	01
M165	1EA4	00 - FF	00
M166	1EA5	00 - FF	00
M167	1EA6	00 - FF	00
M168	1EA7	00 - FF	00
M169	1EA8	00 - FF	00
M170	1EA9	00 - FF	00
M171	1EAA	00 - FF	00
M172	1EAB	00 - FF	00
M173	1EAC	00 - FF	0A
M174	1EAD	00 - FF	00
M175	1EAE	00 - FF	00
M176	1EAF	00 - FF	00
M177	1EB0	00 - FF	00
M178	1EB1	00 - FF	00
M179	1EB2	00 - FF	01
M180	1EB3	00 - FF	00
M181	1EB4	00 - FF	00
M182	1EB5	00 - FF	00
M183	1EB6	00 - FF	00
M184	1EB7	00 - FF	00
M185	1EB8	00 - FF	00
M186	1EB9	00 - FF	00
M187	1EBA	00 - FF	00
M188	1EBB	00 - FF	00
M189	1EBC	00 - FF	00
M190	1EBD	00 - FF	00
M191	1EBE	00 - FF	00
M192	1EBF	00 - FF	00
M193	1EC0	00 - FF	00
M194	1EC1	00 - FF	00
M195	1EC2	00 - FF	01
M196	1EC3	00 - FF	00
M197	1EC4	00 - FF	00
M198	1EC5	00 - FF	00
M199	1EC6	00 - FF	00
M200	1EC7	00 - FF	00
M201	1EC8	00 - FF	01
M202	1EC9	00 - FF	00
M203	1ECA	00 - FF	00
M204	1ECB	00 - FF	00
M205	1ECC	00 - FF	02
M206	1ECD	00 - FF	00
M207	1ECE	00 - FF	00
M208	1ECF	00 - FF	00
M209	1ED0	00 - FF	00
M210	1ED1	00 - FF	00
M211	1ED2	00 - FF	00
M212	1ED3	00 - FF	00
M213	1ED4	00 - FF	00
M214	1ED5	00 - FF	00
M215	1ED6	00 - FF	00
M216	1ED7	00 - FF	00
M217	1ED8	00 - FF	00
M218	1ED9	00 - FF	00
M219	1EDA	00 - FF	00
M220	1EDB	00 - FF	00
M221	1EDC	00 - FF	00
M222	1EDD	00 - FF	00
M223	1EDE	00 - FF	00
M224	1EDF	00 - FF	00

4.6.4 DRIVE SYSTEM SETTING (Fixed values)

Item No.	Item	Variable range	Setting value
F001	DD	000 - 001	000
F002	RAM REF	000 - 001	000

4.6.5 NOT USED (Fixed values)

Item No.	Item	Variable range	Setting value
D001	RESREV	000 - 255	002

4.6.6 NOT USED (Fixed values)

Item No.	Item	Variable range	Setting value
Z001	RESREV	000 - 255	002

4.7 ADJUSTMENT PROCEDURE

4.7.1 VIDEO CIRCUIT

Item	Measuring instrument	Test point	Adjustment part	Description
WHITE BALANCE (HIGHLIGHT)	Remote control unit Signal generator		[1.ADJUST] S030: R DRIVE (Red drive) S031: G DRIVE (Green drive) S032: B DRIVE (Blue drive)	(1) Receive a NTSC 75% all white signal. (2) Set "VIDEO STATUS" to **"STANDARD"**. (3) Set "ASPECT" to **"FULL"**. (4) Select "COLOR TEMPERATURE" to **"LOW"**. (5) Select **"1.ADJUST"** from the SERVICE MODE. (6) Adjust to keep one of **< S030 >** (Red drive), **< S031 >** (Green drive) or **< S032 >** (Blue drive) unchanged, then lower the other two so that the all-white screen is equally white throughout. **NOTE:** Set one or more of **< S030 >**, **< S031 >**, and **< S032 >** to **"137"**. (7) Check that white balance is properly tracked from low light to high light. If the white balance tracking is deviated, adjust to correct it. (8) Press the **[MUTING]** key to memoirze the set value.

4.7.2 MTS CIRCUIT

Item	Measuring instrument	Test point	Adjustment part	Description
MTS INPUT LEVEL	Remote control unit		[1.ADJUST] T001: IN LEVEL	(1) Receive the any broadcast. (2) Select **"1.ADJUST"** from the SERVICE MODE. (3) Verify that the **< T001 >** (IN LEVEL) is set at its initial setting value. (4) Press the **[MUTING]** key to memorize the set value.
MTS SEPARATION	TV audio multiplex signal generator Oscilloscope Remote control unit	L OUT R OUT	[1.ADJUST] T002: LOW SEP T003: HI SEP	(1) Input the stereo L signal (300Hz) from the TV audio multiplex signal generator to the antenna terminal. (2) Connect an oscilloscope to **L OUT** pin of the **AUDIO OUT**, and display one cycle portion of the 300Hz signal. (3) Change the connection of the oscilloscope to R OUT pin of the **AUDIO OUT**, and enlarge the voltage axis. (4) Select **"1.ADJUST"** from the SERVICE MODE. (5) Set the initial setting value of the **< T002 >** (LOW SEP). (6) Adjust the **< T002 >** so that the stroke element of the 300Hz signal will become minimum. (7) Change the signal to 3kHz, and similarly adjust the **< T003>** (HI SEP). (8) Press the **[MUTING]** key to memorize the set value.
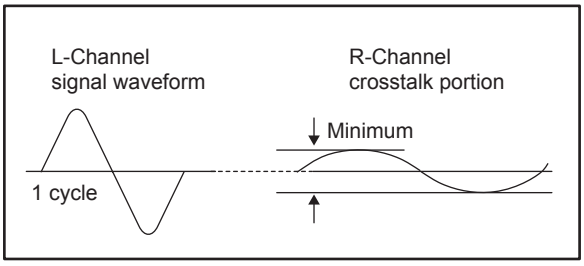				

SECTION 5
TROUBLESHOOTING

5.1 SELF CHECK FEATURE

5.1.1 OUTLINE

This unit comes with the "Self check" feature, which checks the operational state of the circuit and displays/saves it during failure.Diagnosis is performed when power is turned on, and information input to the main microcomputer is monitored at all time. Diagnosis is displayed in 2 ways via screen display and LED flashes. Failure detection is based on input state of I^2C bus and the various control lines connected to the main microcomputer.

5.1.2 HOW TO ENTER THE SELF CHECK MODE

Before entering the Self check Display mode, confirm that the setting of **TV/CATV** SW of the REMOTE CONTROL UNIT is at the **"TV"** side and the setting of **VCR/DVD** SW is at the **"VCR"** side. If the switches have not been properly set, you cannot enter the Self check Display mode.

(1) Set to "**0 minutes**" using the **[SLEEP TIMER]** key.
(2) Press the **[VIDEO STATUS]** key and **[DISPLAY]** key simultaneously, then enter the service mode.
(3) Press the **[2]** key (SELF CHECK) before the service mode screen disappears.
(4) Press the **[SLEEP TIMER]** key to enter Page 2 of the SELF CHECK MODE.
- When the **[RETURN+]** key pressed, the first page change screen.

NOTE:

When a number key other than the **[2]** key is pressed in the SERVICE MENU SCREEN, the other relevant screen may be displayed.
This is not used in the SELF CHECK. Press the **[MENU]** key to return to the SERVICE MENU SCREEN.

5.1.3 HOW TO EXIT THE SELF CHECK MODE

TO SAVE FAILURE HISTORY:

Turn off the power by unplugging the AC power cord plug when in the Self check display mode.

TO CLEAR (RESET) FAILURE HISTORY:

Turn off the power by pressing the **[POWER]** key on the remote control unit when in the Self check display mode.

5.1.4 FAILURE HISTORY

Failure history can be counted up to 9 times for each item. When the number exceeds 9, display will remain as 9. Failure history will be stored in the memory unless it has been deleted.

NOTE:

Only SYNC (with/without sync signals) will be neither counted nor stored.

5.1.5 POINTS TO NOTE WHEN USING THE SELF CHECK FEATURE

In addition to circuit failures (abnormal operation), the following cases may also be diagnosed as "Abnormal" and displayed and counted as "NG".

(1) Temporary defective transmissions across circuits due to pulse interruptions
(2) Misalignment in the on/off timing of power for I^2C bus (VCC) when turning on/off the main power.

Diagnosis may be impeded if a large number of items are displayed as "NG". As such, start Self check check only after 3 seconds in the case of receivers and 5 seconds in the case of panels upon turning on the power. If recurrences are expected, ensure to clear (reset) the failure history and record the new diagnosis reults.

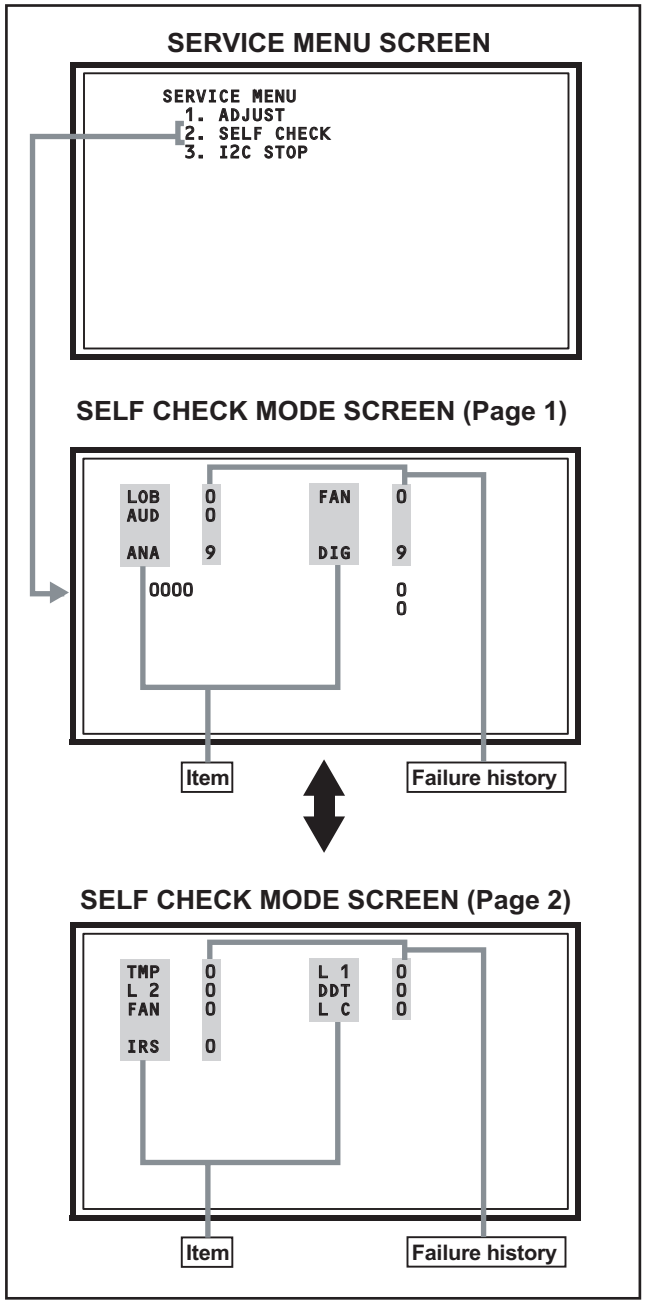

Fig.1

5.1.6 DETAILS

Self check is performed for the following items:

< Page 1 of screen >

Detection item	Display	Detection content	Diagnosis signal (line)	Detection timing
Low bias line short protection	LOB	Confirm the operation of the low bais (16V / 5V / LCD5V / 3.3V / 1.2V) protection circuit. Q9601, Q9651[POWER PWB]	LB_PRO	Detection starts 3 seconds after the power is turned on. If error continues between 200 ms the power is turned off.
Fan lock	FAN	Not used	----	----
Audio	AUD	Not used	----	----
Devices on the ANALOG PWB	ANA	Confirmation of reply of ACK signal which uses I2C communication. IC101, IC102, IC381, IC601, IC606, TU3001 [ANALOG PWB]	SDA	If it checks whenever I2C communication is performed and no reply of ACK signal an error will be counted.
Devices on the DIGITAL PWB	DIG	Confirmation of reply of ACK signal which uses I2C communication. [DIGITAL PWB]	SDA	If it checks whenever I2C communication is performed and no reply of ACK signal an error will be counted.

< Page 2 of screen >

Detection item	Display	Detection content	Diagnosis signal (line)	Detection timing
Temp. sensor	TEM	Not used	----	----
Lamp does not light up	L1	Not used	----	----
Lamp goes out	L2	Not used	----	----
Abnormal DD CPU circuit	DDT	Not used	----	----
Fan lock	FAN	Not used	----	----
Lamp cover open	LC	Not used	----	----
Abnormal of optical iris	IRS	Not used	----	----

5.1.7 METHOD OF DISPLAY WHEN A RASTER IS NOT OUTPUT

In the state where a raster is not output by breakdown of the set, an error is displayed by blink of the POWER LED.

Type of error	POWER LED flash cycle
Low bias line short protection	Blue LED turnig on and off at 1 second intervals.
ATSC TUNER fan lock detection	Blue LED turnig on and off at 2 second intervals.
CableCard error detection	Blue LED turnig on and off at 2 second intervals.

< Explanation of operation >

If error is detected, the power is turned off.
Shortly after a power is turned off, POWER LED will be blinked.
Power cannot be turned on until the power cord takes out and inserts, after a power is turned off.

JVC
Victor Company of Japan, Limited
Flat Panel Display Category 12, 3-chome, Moriya-cho, Kanagawa-ku, Yokohama-city, Kanagawa-prefecture, 221-8528, Japan

(No.YA428)

Printed in Japan
VPT

JVC®

LCD Flat Television Users Guide

For Models:

LT-32X667
LT-32X787
LT-32X887
LT-37X787
LT-37X887
LT-37XM57
LT-40X667
LT-40X787
LT-40X887

Illustration of LT-32X787 and RM-C18G

Important Note:

In the spaces below, enter the model and serial number of your television (located at the rear of the television cabinet). Staple your sales receipt or invoice to the inside cover of this guide. Keep this user's guide in a convenient place for future reference. Keep the carton and original packaging for future use.

Model Number: _____

Serial Number: _____

LCT2104-001B-A
0406TNH-II-IM

Important Safety Precautions

CAUTION

RISK OF ELECTRIC SHOCK DO NOT OPEN

CAUTION: To reduce the risk of electric shock. Do not remove cover (or back). No user serviceable parts inside. Refer servicing to qualified service personnel.

The lightning flash with arrowhead symbol, within an equilateral triangle is intended to alert the user to the presence of uninsulated “dangerous voltage” within the product’s enclosure that may be of sufficient magnitude to constitute a risk of electric shock to persons.

The exclamation point within an equilateral triangle is intended to alert the user to the presence of important operating and maintenance (servicing) instructions in the literature accompanying the appliance.

WARNING: TO PREVENT FIRE OR SHOCK HAZARDS, DO NOT EXPOSE THIS APPARATUS TO RAIN OR MOISTURE.

CAUTION: TO INSURE PERSONAL SAFETY, OBSERVE THE FOLLOWING RULES REGARDING THE USE OF THIS UNIT.

1. Operate only from the power source specified on the unit.
2. Avoid damaging the AC plug and power cord.
3. Avoid Improper installation and never position the unit where good ventilation is unattainable.
4. Do not allow objects or liquid into the cabinet openings.
5. In the event of trouble, unplug the unit and call a service technician. Do not attempt to repair it yourself or remove the rear cover.

Changes or modifications not approved by JVC could void the warranty.

* When you don’t use this TV set for a long period of time, be sure to disconnect both the power plug from the AC outlet and antenna for your safety.
* To prevent electric shock do not use this polarized plug with an extension cord, receptacle or other outlet unless the blades can be fully inserted to prevent blade exposure.

IMPORTANT RECYCLING INFORMATION

This product has a fluorescent lamp that contains a small amount of mercury. It also contains lead in some components. Disposal of the materials may be regulated in your community due to environmental considerations. For disposal or recycling information, please contact your local authorities, or the Electronic Industries Alliance:

http://www.eiae.org

- As an “ENERGY STAR®” partner, JVC has determined that this product or product model meets the “ENERGY STAR®” guidelines for energy efficiency.

IMPORTANT SAFETY INSTRUCTIONS

1) Read these instructions.

2) Keep these instructions.

3) Heed all warnings.

4) Follow all instructions.

5) Do not use this apparatus near water.

6) Clean only with dry cloth.

7) Do not block any ventilation openings. Install in accordance with the manufacturer's instructions.

8) Do not install near any heat sources such as radiators, heat registers, stoves, or other apparatus (including amplifiers) that produce heat.

9) Do not defeat the safety purpose of the polarized or grounding-type plug. A polarized plug has two blades with one wider than the other. A grounding type plug has two blades and a third grounding prong. The wide blade or the third prong are provided for your safety. If the provided plug does not fit into your outlet, consult an electrician for replacement of the obsolete outlet.

10) Protect the power cord from being walked on or pinched particularly at plugs, convenience receptacles, and the point where they exit from the apparatus.

11) Only use attachments/accessories specified by the manufacturer.

12) Use only with a cart, stand, tripod, bracket, or table specified by the manufacturer, or sold with the apparatus. When a cart is used, use caution when moving the cart/apparatus combination to avoid injury from tip-over.

13) Unplug this apparatus during lightning storms or when unused for long periods of time.

14) Refer all servicing to qualified service personnel. Servicing is required when the apparatus has been damaged in any way, such as power-supply cord or plug is damaged, liquid has been spilled or objects have fallen into the apparatus, the apparatus has been exposed to rain or moisture, does not operate normally, or has been dropped.

15) Apparatus shall not be exposed to dripping or splashing and no objects filled with liquids, such as vases, shall be placed on the apparatus.

16) Avoid improper installation and never position the unit where good ventilation is impossible. When installing this TV, distance recommendations must be maintained between the set and the wall, as well as inside a tightly enclosed area or piece of furniture. Keep to the minimum distance guidelines shown for safe operation.

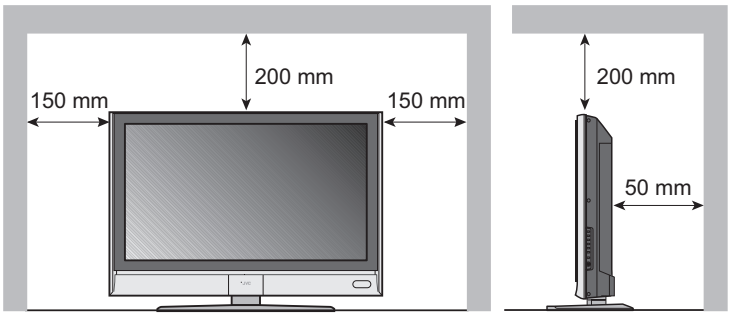

17) Cautions for installation

— Do not tilt the TV towards the left or right, or towards the back.
— Install the TV in a corner on the floor so as to keep cords out of the way.
— The TV will generate a slight amount of heat during operation. Ensure that sufficient space is available around the TV to allow satisfactory cooling.

18) Make enough room for inserting and removing the power plug. Place the TV as close to the outlet as possible. The main power supply for this TV is controlled by inserting or removing the power plug.

FCC Notice:

Note: This equipment has been tested and found to comply with the limits for a Class B digital device, pursuant to Part 15 of the FCC Rules. These limits are designed to provide reasonable protection against harmful interference in a residential installation. This equipment generates, uses and can radiate radio frequency energy and, if not installed and used in accordance with the instructions, may cause harmful interference to radio communications. However, there is no guarantee that interference will not occur in a particular installation. If this equipment does cause harmful interference to radio or television reception, which can be determined by turning the equipment off and on, the user is encouraged to try to correct the interference by one or more of the following measures:

– Reorient or relocate the receiving antenna.
– Increase the separation between the equipment and receiver.
– Connect the equipment into an outlet on a circuit different from that to which the receiver is connected.
– Consult the dealer or an experienced radio/TV technician for help.

Warnings

We have an important note for customers who subscribe to basic cable services (do not have a separate cable box) and plan to use their JVC TV remote control to select channels.

Once you run the Auto Tuner Setup (which detects and programs all the channels your TV is receiving through the RF input), every channel number available from your cable company will appear in your television's Channel Summary and they will all be marked as available for scanning. Even though every channel is detected and appears as available, you will only be able to view those that you specifically subscribe to from your cable company. This will likely mean there are blank channels between those channels you wish to scan or "surf".

We apologize for any inconvenience this may cause but it is important to note that this is not a malfunction of your television. If you want to sequentially scan those channels you subscribe to without blank ones in between, you can contact your cable company for their cable box and remote.

Avoiding Ghost Images

Displaying fixed images for extended periods of time can leave a subtle but temporary ghost image on your screen. To avoid this, mix your viewing pattern.

Examples include, but are not limited to the following:

- Stock-market report bars
- Shopping channel logos and pricing displays
- Video game patterns or scoreboards
- Bright station logos
- Internet web sites or other computer-style images.
- DVD discs, video tapes, laser discs
- Broadcast, cable, satellite channels or digital television tuners/converters.

For example...

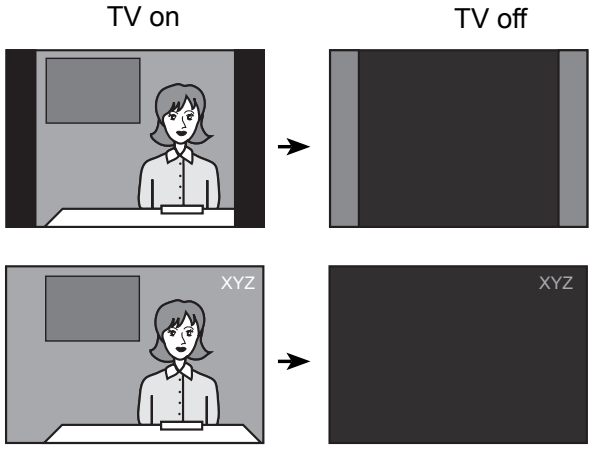

Warnings (Continued...)

Caring for the Cabinet

Normally, light dusting with a soft, non-scratching duster will keep your TV clean.

If you wish to wipe down the television, first unplug it. Then wipe gently with a soft cloth, slightly moistened with water. You can add a few drops of mild liquid detergent to the water to help remove spots of oily dirt.

- DO NOT allow liquid to enter the TV through the ventilation slots.
- DO NOT use strong or abrasive cleaners on the TV.
- DO NOT spray liquids or cleaners directly on the TV's surface.
- DO NOT rub or scrub the TV harshly. Wipe the set gently with a soft cloth.

Caring for the Screen

The screen is treated with an electrostatic-proof coating. When it gets dirty, wipe it gently with a soft cloth. If the screen is very dirty, wipe it down with a cloth dipped in a diluted kitchen cleaner and thoroughly wrung-out. Then wipe immediately after with a clean, dry cloth.

Do not apply alcohol, organic solvents (like acetone), acidic or alkaline cleansers to the screen. These will remove the coating layer and cause discolorations.

Do not push or hit the screen. This could cause scratches on the screen surface and image distortions.

Table of Contents

Important Safety Precautions . . 2
Warnings 5
Quick Setup 8
Unpacking your TV 8
Using the stand 8
TV Models 9
TV Remote Control 10
Getting Started 11
The Remote Control 11
Connecting Your Devices 12
Interactive Plug In Menu 24
Programming your remote 27

Onscreen Menus 31
Using the Guide 31
Onscreen Menu System 32
Initial Setup 34
Auto Tuner Setup 34
Channel Summary 35
Channel Label 36
V-Chip 37
Set Lock Code 43
Language 44
Closed Caption 45
Auto Shut Off 47
XDS ID 47
Noise Muting 48
Front Panel Lock 48
V1 Smart Input 49
Video Input Label 50
Position Adjustment 51
Power Indicator 51
Digital-In 52
Digital-In1 Audio 52
Digital Setup 53
Picture Adjust 55
Picture Settings 55
Color Temperature 55
Color Management 56
Dynamic Gamma 56
Smart Picture 56
Digital VNR 57
MPEG NR 57
Smart Sensor 57
Sensor Effect 58
Reset 58
Sound Adjust 59
Sound Settings 59
Turn On Volume 59
Volume Limit 59
Reset 59
Clock/Timers 60
Set Clock 60
On/Off Timer 61

Button Functions 62
Multi Screen Function 62
Split 62
Index 63
Freeze 63
Swap 63
Select 63
Menu 63
OK 63
Back 63
Power 64
Number Buttons 64
Tune 64
Input 64
TheaterPro 64
Return+/TV 65
Sound 65
Video Status 66
Natural Cinema 66
Sleep Timer 67
ML/MTS 67
Muting 67
Display 68
C.C. 68
Channel +/- 68
Volume +/- 68
Favorite 69
Aspect 70
Aspect Ratios 70
TV/CATV Slide Switch 72
VCR/DVD Slide Switch 72
VCR Buttons 72
DVD Buttons 72
Light 72
D/A (Digital/Analog) 73
Sub Channel 73
Guide 73

OSD Information 74
Weak Signal 74
No Program 74
Invalid Signal 74

Troubleshooting 75
Specifications 77
Warranty 78
Authorized Service Center . . . 79

Quick Setup

Unpacking your TV

Thank you for your purchase of a JVC LCD Flat Television. Before you begin setting up your new television, please check to make sure you have all of the following items. In addition to this guide, your television box should include:

1 Television

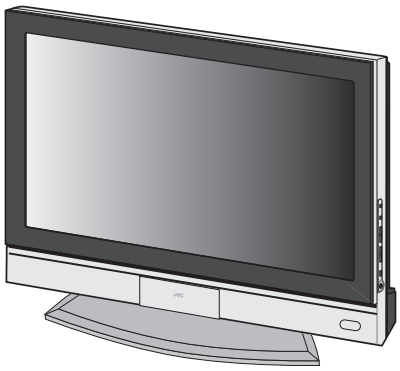

1 Remote Control

Two AA Batteries

Note: Your television and/or remote control may differ from the examples illustrated here.

Using the stand

LT-40X887, LT-40X787 and LT-40X667 ONLY

This TV comes with a Table Top Stand already attached.

This stand can be used to adjust the direction of the TV screen 20° to the left or right.

Rotate the TV left or right

While holding the bottom of the stand with one hand, use your other hand to hold the edge of the panel and slowly adjust the direction of the TV stand.

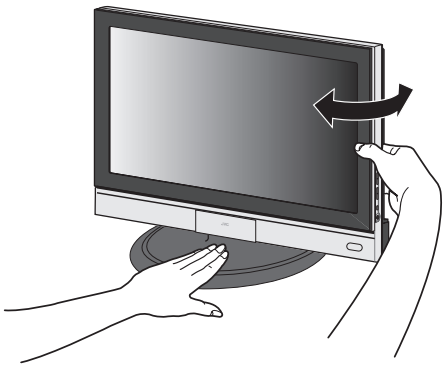

TV Models

Before you connect your television to another device, please refer to the proper diagrams for your specific TV and remote. These will help assist you in understanding how to connect your television to another device, as well as use the remote to set up your television.

Rear Panel Diagram

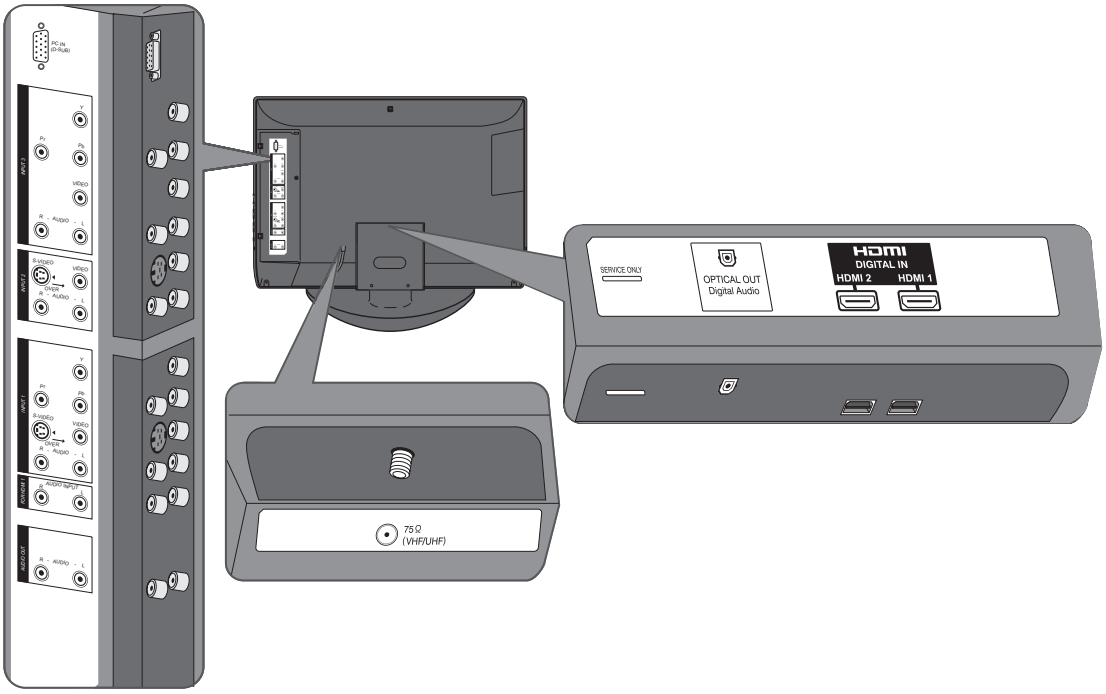

Side Panel Diagram

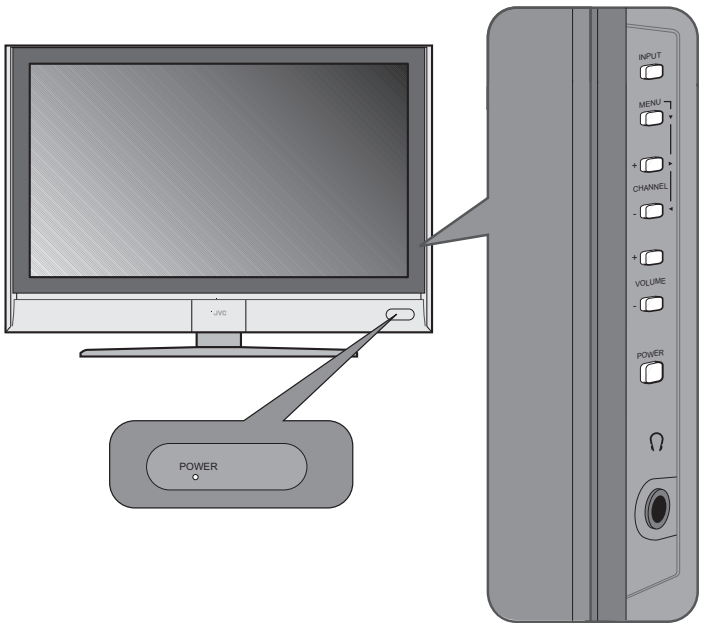

Quick Setup

Remote Control

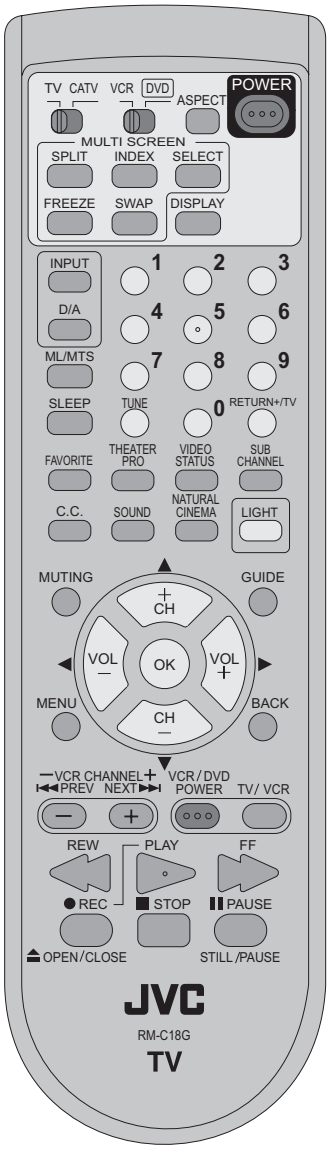

RM-C18G

Notes:

- For information on remote control buttons, see pages 62 - 73.
- SUB CHANNEL and GUIDE buttons are for digital channels. If your TV is connected to an ATSC antenna or Digital Cable, you can use these buttons.

Getting Started

These quick setup pages will provide you, in three easy steps, with the basic information you need to begin using your new television right away. If you have questions, or for more detailed information on any of these steps, please consult other sections of this manual.

Step 1 – The Remote Control

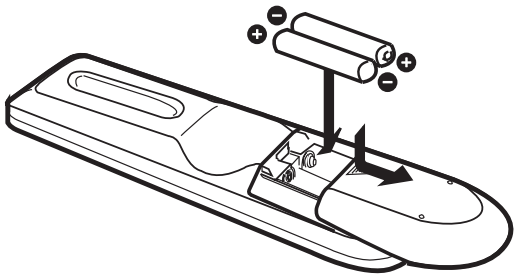

Before you can operate your remote control, you first need to install the batteries (included).

Slide the cover on the back of the remote down towards the bottom of the remote control. Insert two batteries (included) carefully noting the "+" and "–" markings, placing the "–" end in the unit first. Slide the cover back into place.

When you change the batteries, try to complete the task within three minutes. If you take longer than three minutes, the remote control codes for your VCR, DVD, and/or cable box/satellite receiver may have to be reset. See pages 27 - 30.

Key Feature Buttons

The four key feature buttons at the center of the remote can be used for basic operation of the television. The top and bottom buttons will scan forward and back through the available channels. To move rapidly through the channels using JVC's **Hyperscan** feature, press and hold CH+ or CH–. The channels will zip by at a rate of five channels per second. The right and left buttons will turn the volume up or down. These buttons are also marked with four arrows and are used with JVC's onscreen menu system. To use the onscreen menus, press the MENU button.

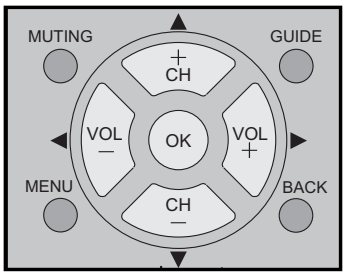

Basic Operation

Turn the television on and off by pressing the POWER button at the top right corner of the remote. If this is the first time you are turning on the TV, the interactive plug-in menu appears.

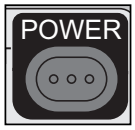

- Make sure the TV/CATV switch is set to TV. Move the switch to CATV only if you need to operate a cable box.

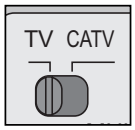

- Slide the VCR/DVD selector switch to VCR to control a VCR. Slide to DVD to control a DVD player. Please see pages 27 to 30 for instructions on programming your remote control to operate a cable box, VCR or DVD player.

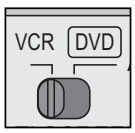

Quick Setup

Step 2 - Connecting your devices

To make these connections, you will use plugs like the ones illustrated below.

Coaxial Cables

Used to connect an external antenna or cable TV system to your TV.

S-Video Cable

Used to make video connections with S-Video VCRs, Camcorders and DVD players.

Component Cables
Composite Cables
Audio Cables

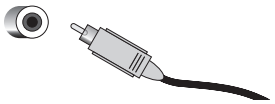

Used to connect audio/video devices like VCRs, DVD players, stereo amplifiers, game consoles, etc.

Notes:

- These connections are examples.
- After you are finished connecting your devices, plug the power cord into the nearest power outlet and turn on the TV.
- If you follow these diagrams and the television does not work properly, contact your local cable operator.
- To connect a DVD player, see VCR Connection. A DVD player is optional
- If you have a satellite television system, refer to the satellite TV manual.

Cable Holder

A cable holder which keeps your connection cables tidy is attached on the back of the stand. To open, loosen the screws with you fingers. After putting the cables in the cable holder, attach it to the back of the stand again by tightening the screws with your fingers.

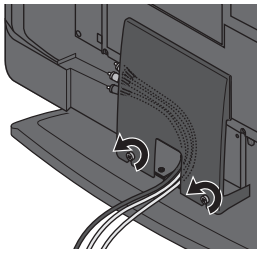

LT-40X887, LT-40X787
LT-40X667

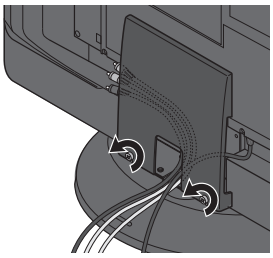

LT-37X887, LT-37X787
LT-37XM57

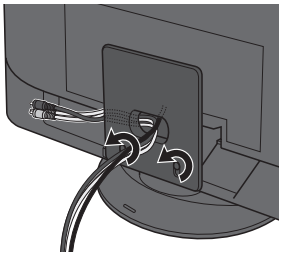

LT-32X887, LT-32X787,
LT-32X667

Remove the terminal cover

There are connection terminals behind the cover on the left in the back of the TV. Remove the cover before connecting an antenna or other devices. The cover can be removed by removing the hooks. When replacing the cover, place the side of the cover against the TV and insert the hooks.

Note:

- Leave the terminal cover off if they do not fit properly. Do not force to replace the cover. Doing so may damage the connection cables and cover.

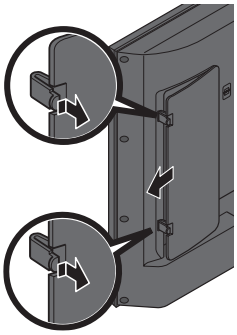

No VCR Connection

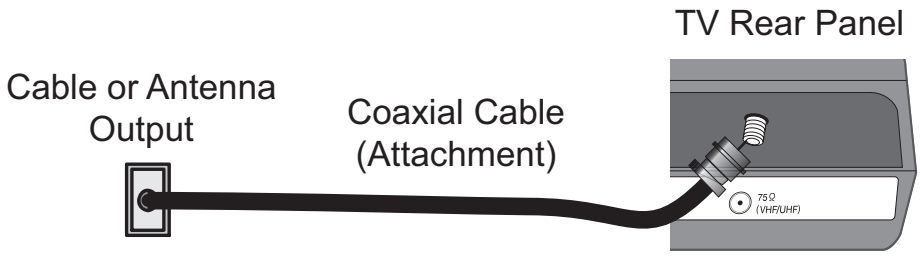

Quick Setup

VCR Connection

Notes:

- Green, blue and red are the most common colors for DVD cables. Some models may vary colors. Please consult the user's manual for your DVD player for more information.
- Be careful not to confuse the red DVD cable with the red audio cable. It is best to complete one set of connections (DVD or audio output) before starting the other to avoid accidentally switching the cables.
- You may also connect the DVD player to Input 1.

Diagram #1

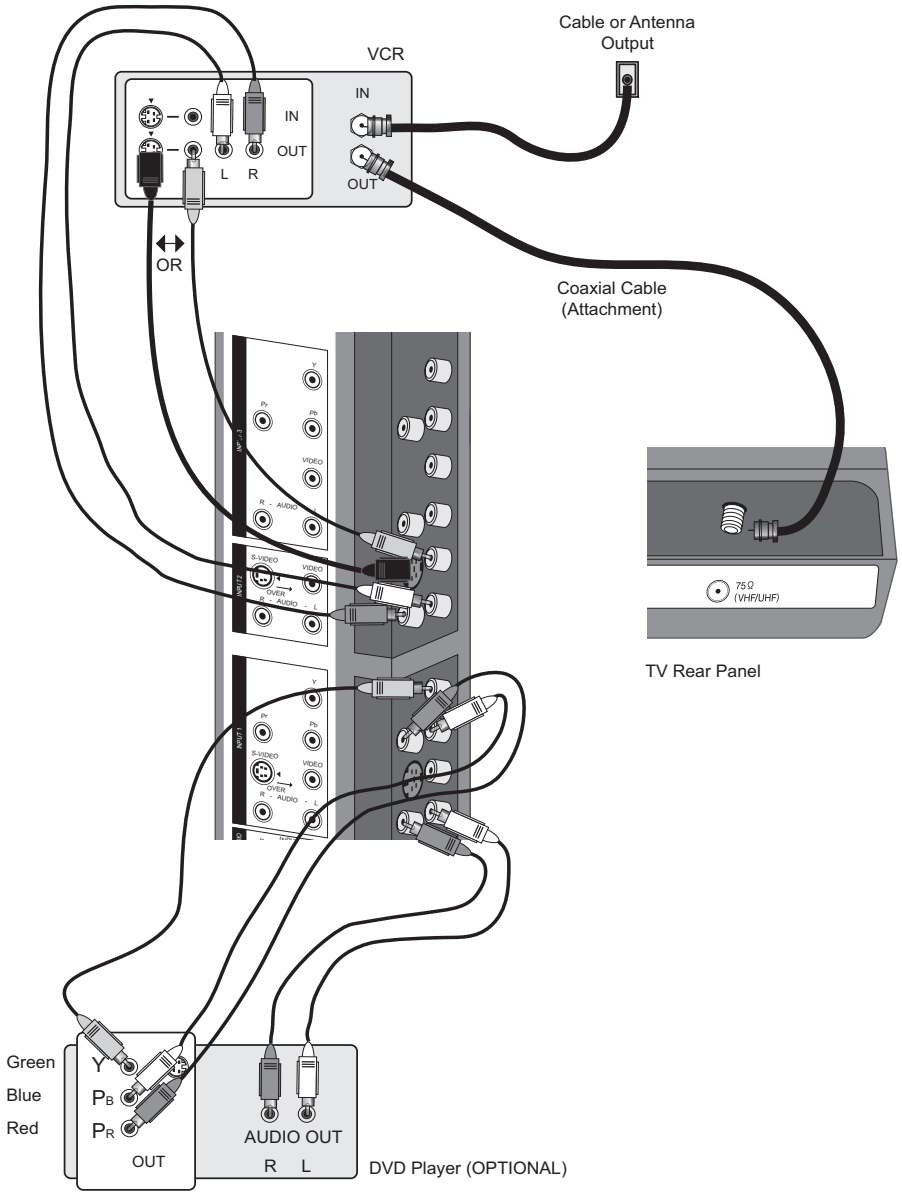

Note:

- If this connection setup does not work for you, try the connection setup on page 15.

Diagram #2

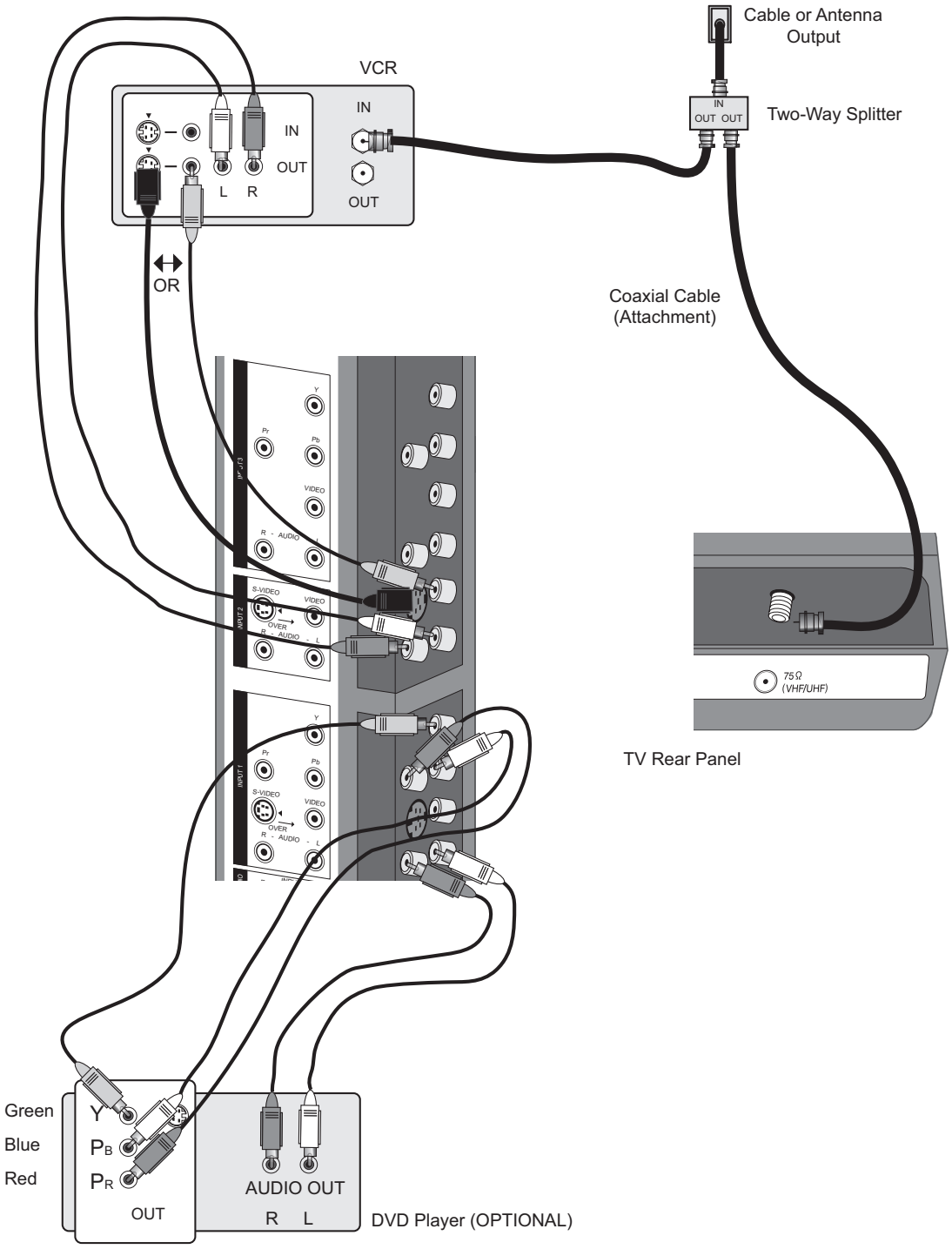
Cable or Antenna
Output
VCR
IN
OUT
L R
IN
OUT
OUT
IN
OUT OUT
Two-Way Splitter
OR
Coaxial Cable
(Attachment)
75Ω
(VHF/UHF)
TV Rear Panel
Green
Blue
Red
Y
PB
PR
OUT
AUDIO OUT
R L
DVD Player (OPTIONAL)

Quick Setup

Connecting to a Camcorder

You can connect a camcorder to you televison by using the input jacks located on the back of the television.

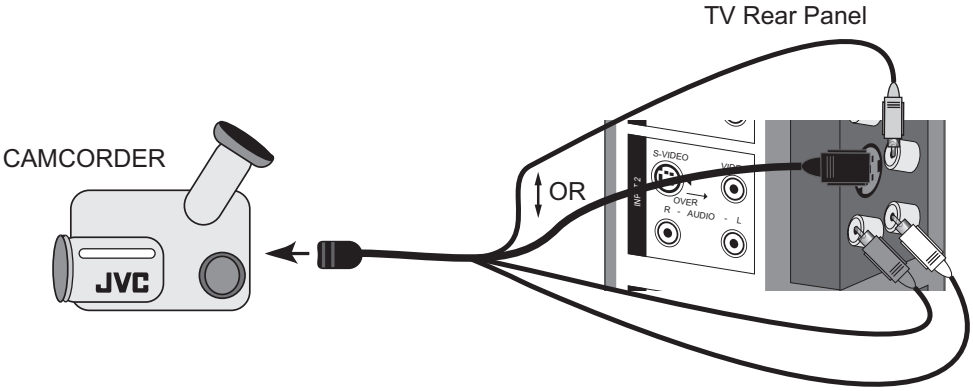

1) Connect a yellow composite cable from the camcorder VIDEO OUT, into the VIDEO IN on the back of the TV, **OR** connect an S-Video cable from the camcorder to the back of the TV.
2) Connect a white cable from the camcorder LEFT AUDIO OUT, into the LEFT AUDIO IN on the back of the TV.
3) Connect a red cable from the camcorder RIGHT AUDIO OUT, into the RIGHT AUDIO IN on the back of the TV.

Note:

- If your camcorder is a mono sound model it will have only one AUDIO OUT. Connect it to the LEFT AUDIO IN on the back of the TV.

Headphone Connection

You can connect a pair of headphones to the television using the headphone jack located on the side of the television.

1) Plug a headphone jack into the headphone jack on the television's side panel.

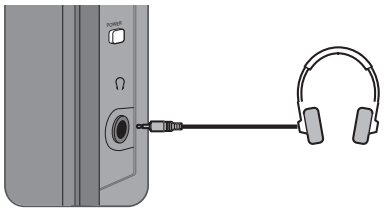

TV Side Panel

Connecting to an External Amplifier

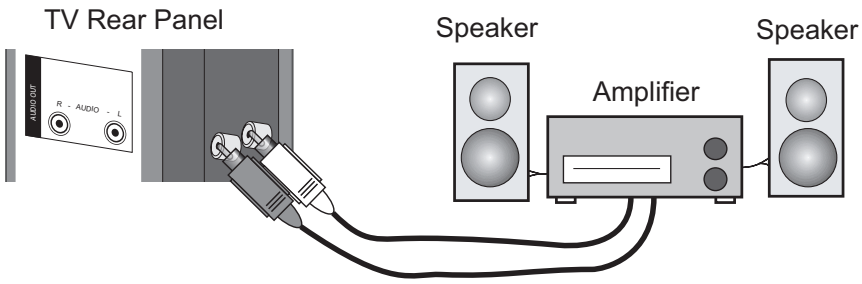

1) Connect a white cable from the LEFT AUDIO OUTPUT on the back of the TV to the LEFT AUDIO INPUT on the amplifier.
2) Connect a red cable from the RIGHT AUDIO OUTPUT on the back of the TV to the RIGHT AUDIO INPUT on the amplifier.

Notes:

- Refer to your amplifier's manual for more information.
- You can use AUDIO OUTPUT for your home theater system.
- You can not output audio using the AUDIO OUTPUT under the following conditions:
  1) When you have digital sound from an HDMI device connected to the HDMI 1 or HDMI 2 connection on the back of your TV. (See page 20).
  2) When you have analog sound from a DVI device connected to the AUDIO IN "FOR HDMI 1" connection. (See page 19).

Connecting to an AV Receiver using your television's V1 Smart Input

By connecting your AV Receiver to your television's V1 Smart Input, you can watch picture sources from many different devices, without having to change or use the other input connections on your TV. This allows you to free up the other input connections so you can connect more devices to your television.

TV Rear Panel

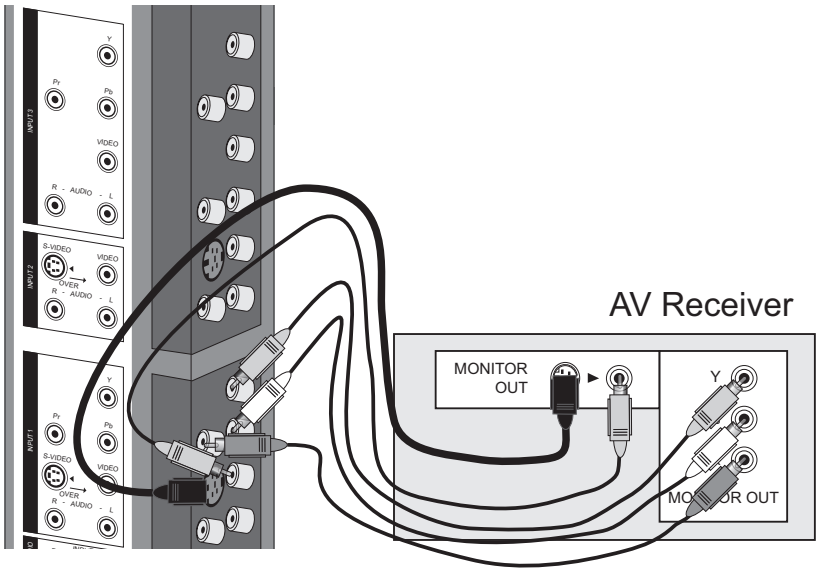

1) Connect an S-Video Cable from the AV Receiver's MONITOR OUT, to the S-Video INPUT-1 on the back of your television.
2) Connect a Yellow Composite Cable from the AV Receiver's MONITOR OUT, into the VIDEO INPUT-1 on the back of your television.
3) Connect a Green Component Cable from the AV Receiver's Y MONITOR OUT, into the Y VIDEO INPUT-1 on the back of your television.
4) Connect a Blue Component Cable from the AV Receiver's P_B MONITOR OUT, into the Pb VIDEO INPUT-1 on the back of your television.
5) Connect a Red Component Cable from the AV Receiver's P_R MONITOR OUT, into the Pr VIDEO INPUT-1 on the back of your television.

Notes:

- **This function does not apply to TV Model LT-32X667.**
- Please refer to your AV Receiver instruction manual for more information on connecting your speakers and other devices like a DVD player.
- Use your AV Receiver's remote to switch to the different devices you have connected.
- Some AV Receivers may not respond when the V1 Smart Input function is turned on.
- If you have video connections for each input device connected to your AV Receiver, you should not connect them using both S-Video and Composite connection at the same time when you are using V1 Input as the V1 Smart Input. In this case we recommend using the S-Video connection.

Connecting to a Digital TV Receiver

By connecting a Digital TV Receiver, high definition pictures can be displayed on your TV in their digital form.

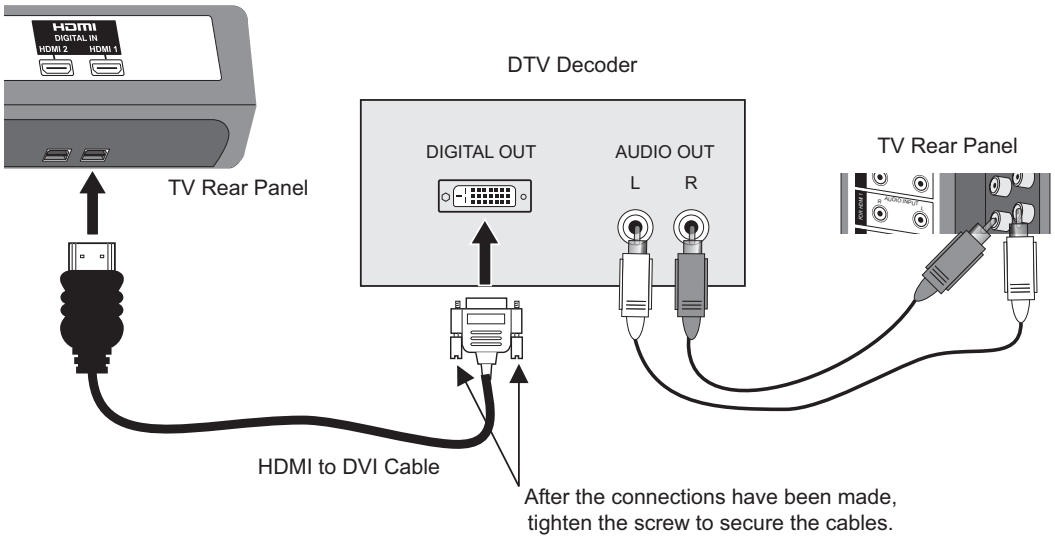

1) Connect the HDMI to DVI Cable from the DIGITAL OUT on the back of your DTV decoder, to the DIGITAL-IN on the back of your television.
2) Connect a red cable from the DTV decoder RIGHT AUDIO OUT, to the RIGHT AUDIO INPUT "FOR HDMI 1" on the back of your television.
3) Connect a white cable from the DTV decoder LEFT AUDIO OUT, to the LEFT AUDIO INPUT "FOR HDMI 1" on the back of your television.

- The digital-in terminal is not compatible with the picture signal of a personal computer.
- Use a HDMI to DVI cable (commercially available) in order to digitally connect the television with a DTV decoder.

Notes:

- If 480p signals (640x480 or 720x480) are displayed on the screen, the horizontal balance may be slightly shifted. Access the “DIGITAL-IN” in the initial setup menu to adjust it. (Refer to page 52.)
- When you do the above connection, set DIGITAL-IN1 AUDIO in the Initial Setup menu to ANALOG. See "DIGITAL-IN1 AUDIO", page 52.
- The Analog Audio input can only be used with the HDMI 1 input.
- When setting the “DIGITAL AUDIO – ANALOG / DIGITAL” menu setting on the TV, please note that this setting only effects the HDMI 1 jack and that if you use a DVI to HDMI adapter this connection must be made to the HDMI 1 along with analog audio cables.

Connecting to a HDMI Compatible Device

By connecting a HDMI compatible device, high definition pictures can be displayed on your TV in their digital form. Some HDMI devices can include DVD players, D-VHS or any HDMI compatible device.

HDMI (High Definition Multimedia Interface) is the first industry supported, uncompressed, all digital audio/video interface. HDMI provides and interface between any audio/video source, such as a set-top box, DVD player, A/V receiver or an audio and/or video monitor, such as a digital television (DTV).

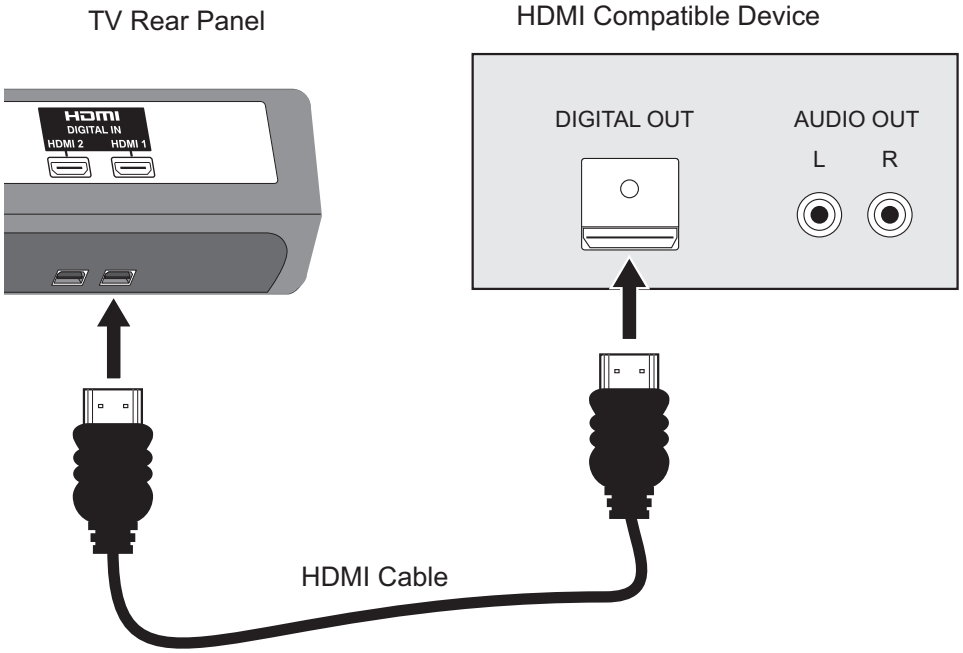

1) Connect the HDMI Cable from the DIGITAL OUT on the back of your DTV or HDMI device, to the DIGITAL-IN on the back of your television.

Notes:

- When you do the above connection, set DIGITAL-IN1 AUDIO in the Initial Setup menu to DIGITAL. See "DIGITAL-IN1 AUDIO", page 52.
- Some decoders may not respond depending on the equipment that you have connected when it is connected to the HDMI.
- If the HDMI output device signal is changed (for example, 480i/60Hz is changed to 480p/60Hz), the screen may turn green and there may be some distortion for a short time until the signal becomes stable.
- When you have an HDMI device connected to the HDMI 1 connection on the back of your TV, your TV detects it, and blocks the analog audio signal coming into the "FOR HDMI 1" jacks. Therefore, you can not hear any analog sound from the other device conected to the "FOR HDMI 1" jacks, while you are viewing the images from the HDMI device.

Connecting to an amplifier using your optical output

You can connect an amplifier that has an optical digital input terminal by using an optical digital cable from the optical output. The signal that is output can be PCM or Dolby Digital.

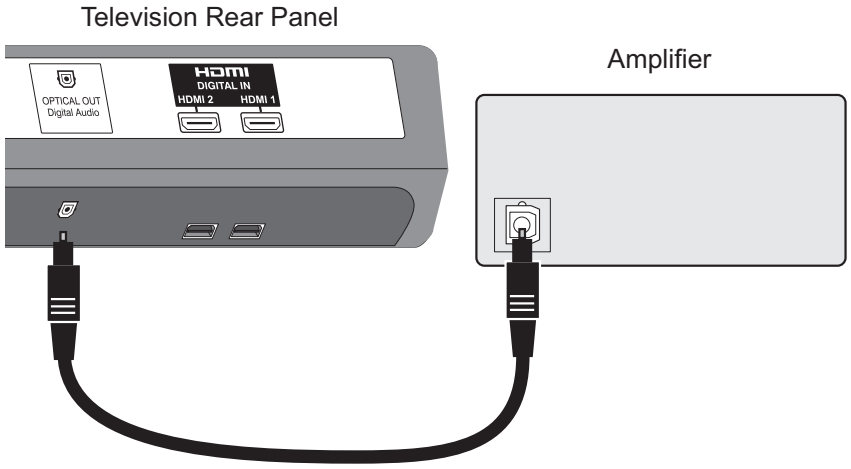

1) Connect the optical cable from underneath the television to the back of the amplifier.

Notes:

- This terminal can only output digital audio.
- In order to use the optical output connection, select PCM or Dolby Digital on Digital Sound in the Digital Setup Menu. See page 54.
- Refer to your owners manual on using your amplifier.

Connecting to the computer

This TV can be used as a computer screen. Use a commercially available D-SUB cable to connect the TV's PC INPUT terminal to the computer's analog RGB output terminal. If you want to listen to the sound from the computer, use a commercially available RCA cable to connect the INPUT-3 audio input terminal to the computer's audio output terminal.

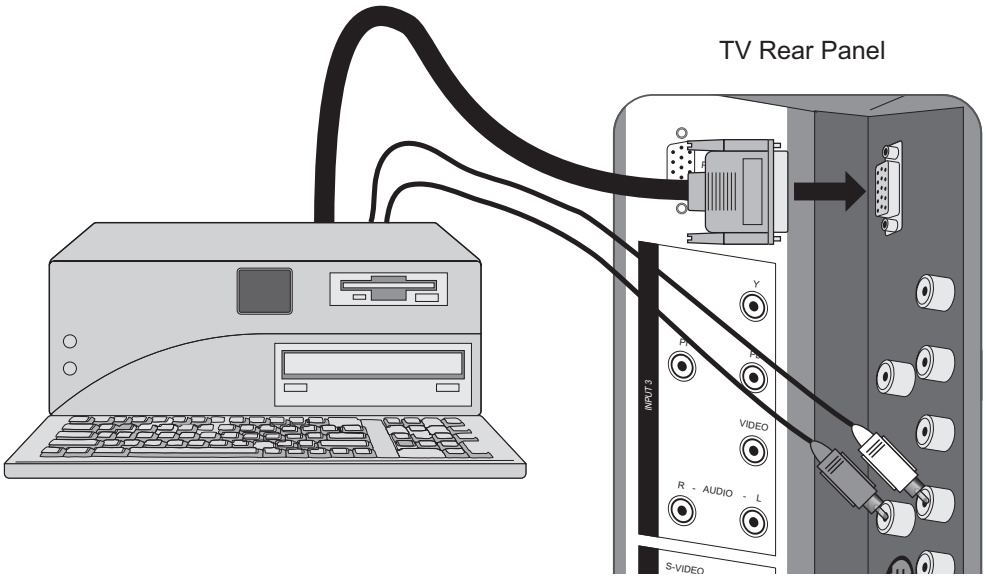

Notes:

- Refer to your computer manual for a detailed explanation of the connections concerning your computer.
- Make sure that the connectors are facing the correct way when connecting.
- After connecting, tighten the two screws to fix the connectors in place.

Looking at the images from a computer

After starting the computer, press the INPUT button to choose INPUT-3. You can listen to the sound when the sound from the computer is connected to the INPUT-3 AUDIO input terminal.

Notes:

- When the sound from the computer is connected to INPUT-3 by choosing external input INPUT-3, the sound from the computer can be listened to, but the images from the computer cannot be seen.

Table of signals for each type of computer

Resolution	Vertical Frequency (Hz)	Horizontal Frequency (kHz)
640 x 480 (VGA)	60.0	31.5
1024 x 768 (XGA)	60.0	48.4

- Only the above formats are supported.
- Even with the above formats at 60 Hz, some problems may be experienced depending on the quality of the synchronous signal. (Depending on the quality, some pictures may not be displayed correctly).
- Apple Macintosh* computers are not supported.

When a picture is not displayed

With some computers, some problems can be solved by changing the settings. Check the computer's refresh rate and set it to 60Hz. Computers that cannot set the refresh rate to 60 Hz, can not be used with this TV. Refer to the computer's instruction manual.

*Apple Macintosh is a registered trademark of Apple Computer, Inc.

Note:

- If you are inputting a PC signal that is invalid, "Invalid Signal" will appear on the TV screen. It appears when the input is PC and it is a single screen.

Quick Setup

Step 3 – The Interactive Plug In Menu

When you turn your television on for the first time the interactive plug-in menu will appear. The plug-in menu helps you to get your TV ready to use by letting you set your preferences for:

- The language in which you want the onscreen menus to appear.
- Setting the TV's clock to the correct time so your timer functions will work properly. You can choose "AUTO" or "MANUAL" for setting the clock.
- The auto tuner setup of which channels you wish to receive.

We recommend you complete the interactive plug-in items before you start using your television.

Notes:

- The interactive plug-in menu setting does not appear if your TV has been turned on before. In this case use the onscreen menus to perform these settings. See pages 44, 60 and 34.
- If you press the Menu button while setting up the interactive plug-in menu, it will skip over it.

Language

After the "JVC INTERACTIVE PLUG IN MENU" has been displayed, the TV automatically switches to the LANGUAGE settings. You can choose to view your onscreen menus in three languages: English, French (Français) or Spanish (Español).

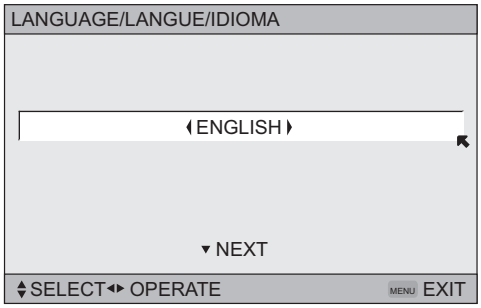

◀▶ To choose a language:
(English, Français or Español)

▼ To NEXT (To set clock)

(To be continued...)

Auto Clock Set

Before you use any of your TV's timer functions, you must first set the clock. You may precisely set your clock using the XDS time signal broadcast by most public analog broadcasting stations. If you do not have this in your area, you will have to set the clock manually. See manual clock set below. To set the clock using the XDS signal:

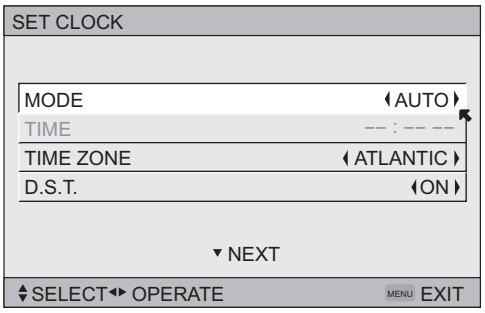

◀▶ To choose AUTO
▼ To TIME ZONE

◀▶ To select your time zone: (Atlantic, Eastern, Central, Mountain, Pacific, Alaska or Hawaii)

▼ To move to D.S.T. (Daylight Savings Time)
◀▶ To turn D.S.T. ON or OFF
▼ To NEXT (To Auto Tuner Setup)

Notes:

- D.S.T. can be used when it is set to ON in the SET CLOCK menu.
- Only when the MODE is set to AUTO, the Daylight Savings Time feature automatically adjusts your TV's clock for Daylight Savings. The clock will move forward one hour at 2:00 am on the first Sunday in April. The clock will move back one hour at 2:00 am on the last Sunday in October.
- You will have to reset the clock after a power interruption. You must set the clock before operating any timer functions.

Manual Clock Set

To set your clock manually (without using the XDS signal), choose MANUAL. If you choose AUTO, see auto clock set above.

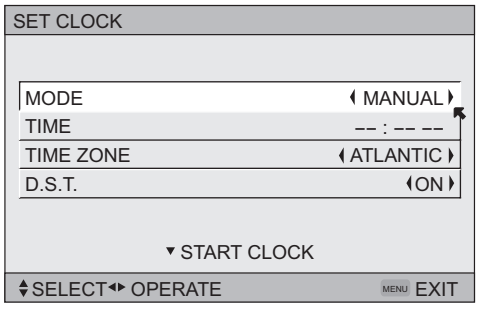

◀▶ To choose MANUAL
▼ To TIME
◀▶ To set the hour
▼ To minute
◀▶ To set the minute
▼ To TIME ZONE
◀▶ To select your time zone: (Atlantic, Eastern, Central, Mountain, Pacific, Alaska or Hawaii)
▼ To move to D.S.T. (Daylight Savings Time)
◀▶ To turn D.S.T. ON or OFF
▼ To START CLOCK

Note:

- You will have to reset the clock after a power interruption. You must set the clock before operating any timer functions.

(To be continued...)

Quick Setup

Auto Tuner Setup

In auto tuner setup, the TV automatically scans through all available channels, memorizing the active ones and skipping over blank ones or channels with weak signals. This means when you scan (using the CHANNEL +/– buttons) you will receive only clear, active channels.

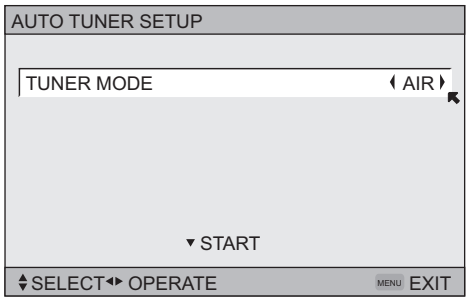

◀▶ To choose CABLE or AIR (or SKIP when you skip Analog Auto Tuner Setup)

▼ To START

After Analog Auto Tuner Setup is finished, Digital Auto Tuner Setup starts.

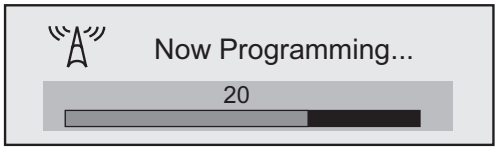

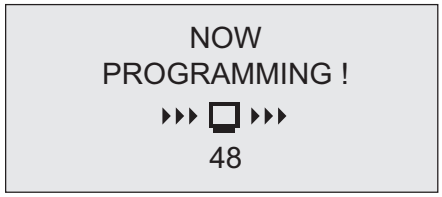

When the setup is finished, "THANK YOU ! SETUP IS NOW COMPLETE" is displayed. Your quick setup is now complete. You can now begin watching your television, or you can continue on in this guide for more information on programming your remote control, or using the JVC onscreen menu system to customize your television viewing experience.

Notes:

- If you want to cancel the Auto Tuner Setup, press the MENU button.
- Noise muting will not work during Auto Tuner Setup.
- If you choose SKIP, it finished without doing the Auto Tuner Setup.

Cable Box and Satellite Users: After your auto tuner setup is complete, you may, (depending on the type of hookup), have only 1 channel, usually 3 or 4 in the auto tuner memory. This is normal.

Programming your remote control

You can program your remote to operate your cable box, satellite receiver, VCR or DVD player by using the instructions and codes listed below. If the equipment does not respond to any of the codes listed below or to the code search function, use the remote control supplied by the manufacturer.

Cable Box or Satellite Codes

The remote control is programmed with cable box and satellite codes for power on/off, channel up/down, and 10 key operation.

1) Find the cable box or satellite brand from the list of codes shown below.
2) Slide the 2-way selector switch to “CATV”.
3) Press and hold down the DISPLAY button, then enter the first code number listed with the 10 key pad.
4) Release the DISPLAY button, and confirm the operation of the cable box/satellite receiver.

- If your cable or satellite box does not respond to the first code, try the others listed. If it does not respond to any code, try the search codes function, on page 30.

Cable Box	Codes
ABC	024
Archer	032, 025
Cableview	051, 032
Citizen	022, 051
Curtis	058, 059
Diamond	024, 032, 025
Eagle	029
Eastern	034
GC Brand	032, 051
Gemini	022, 043
General Instrument/Jerrold	065, 024, 025, 026, 027, 020, 021, 022, 057, 023, 072, 074
Hamlin	040, 041, 042, 045, 058, 064
Hitachi	049, 024
Macom	049, 050, 051, 054
Magnavox	033
Memorex	030
Movietime	032, 051
Oak	039, 037, 048
Panasonic	055, 056, 060, 071, 073
Paragon	063
Philips	028, 029, 030, 052, 053, 031, 069
Pioneer	047, 062
Pulsar	051, 032

Cable Box	Codes
Puser	032
RCA	061, 070
Realistic	032
Regal	058, 064, 040, 041, 042, 045, 068
Regency	034
Rembrandt	037, 032, 051, 038
Samsung	051
Scientific Atlanta	057, 058, 059
SLMark	051, 047
Sprucer	051, 056
Stargate	032, 051
Telecaption	067
Teleview	047, 051
Texscan	044
Tocom	035, 036, 066, 074
Toshiba	050, 048
Unika	032, 025
Universal	022, 032
Videoway	052
Viewstar	029, 030
Zenith	063, 046
Zenith/Drake Satellite	046

Digital Satellite Systems	Codes
Echostar (Dish Network)	100, 113, 114, 115
Express VU	100, 113
G.E.	106
G.I.	108, 120, 121, 122
Gradiente	112
Hitachi	104, 111
HNS (Hughes)	104
Magnavox	102, 103
Panasonic	105
Philips	102, 103, 116
Primestar	108
Proscan	106, 109, 110
RCA	106, 109, 110
Sony	107
Star Choice	104, 108
Toshiba	101, 104, 117, 118, 119
Uniden	102, 103

Quick Setup

VCR Codes

The remote control is programmed with VCR codes for power on/off, play, stop, fast-forward, rewind, pause, record, channel up/down operation.

1) Find the VCR brand from the list of codes shown below.
2) Slide the first 2-way selector switch to “TV” and the other 2-way selector switch to “VCR”.
3) Press and hold down the DISPLAY button, then enter the first code number listed with the 10 key pad.
4) Release the DISPLAY button, and confirm the operation of the VCR.

- If your VCR does not respond to the first code, try the others listed. If it does not respond to any of the codes, try the search codes function on page 30.
- After you program your remote, some VCR buttons may not work properly. If so, use the VCR’s remote.
- To record, hold down the REC button on the remote and press PLAY.

VCR	Codes
Admiral	035
Aiwa	027, 032, 095
Akai	029, 072, 073, 074
Audio Dynamic	003, 005
Bell & Howell	063, 071
Broksonic	020, 026, 094
Canon	023, 025
CCE	043
Citizen	064
Craig	063, 029, 064
Curtis Mathes	045, 024, 027, 093
Daewoo	043, 059, 024, 092
DBX	003, 004, 005
Dimensia	045, 093
Emerson	043, 026, 077, 061, 025, 042, 020, 076
Fisher	063, 066, 067, 065, 071, 091
Funai	027, 026, 020, 000
G.E.	033, 045, 024
Go Video	037, 051, 049, 050, 089
Goldstar	064
Gradiente	083, 084, 081, 000, 001
Hitachi	023, 045, 058, 093, 027, 081
Instant Replay	024, 023
Jensen	003
JVC	003, 004, 005, 000, 001, 002, 006, 007
Kenwood	003, 004, 064, 005
LG	064
LXI	027, 064, 058, 065, 066, 063, 067
Magnavox	031, 023, 024, 086
Marantz	003, 004, 005
Marta	064
Memorex	024, 067
MGA	038, 040, 047, 048, 041, 042
Minolta	058, 045, 093
Mitsubishi	038, 040, 047, 048, 041, 042, 078, 090
Multitech	047, 027, 062
NEC	003, 004, 005, 000
Olympic	024, 023
Optimus	028, 021, 035, 064
Orion	026, 020
Panasonic	023, 024, 021, 022
Penney	024, 058, 045, 063, 003, 004, 005, 093
Pentax	058, 005, 045, 093
Philco	031, 024, 027, 023, 026, 020, 043
Philips	031, 023, 024, 086
Pioneer	023
Proscan	045, 058, 023, 024, 031, 046, 059, 060, 093, 033, 087
Quasar	021, 022, 023, 024
Radio Shack	033, 024, 063, 036, 067, 040, 027
RCA	033, 045, 058, 023, 024, 031, 046, 059, 060, 083, 084, 085, 087, 093, 096
Realistic	024, 063, 036, 067, 040, 027
Samsung	037, 060, 062, 033, 089
Samtron	089
Sansui	003, 026, 020, 052
Sanyo	063, 067, 091, 071
Scott	059, 060, 062, 067, 038, 040, 047, 048, 026, 020
Sears	063, 064, 065, 066, 058
Sharp	035, 036, 080, 088
Shintom	075
Signature 2000	027, 035
Singer	075
Sony	028, 029, 030, 053, 054, 055
SV 2000	027
Sylvania	031, 023, 024, 027
Symphonic	027, 081
Tashiro	064
Tatung	003, 004, 005
Teac	003, 004, 027, 005
Technics	021, 022, 023, 024
Teknika	024, 027, 070
Thomson	033, 096
Toshiba	059, 046, 079
Vector Research	005
Wards	035, 036, 067, 044, 064
Yamaha	063, 003, 004, 005
Zenith	044, 082, 064, 094

DVD Codes

The remote control is programmed with DVD codes for power on/off, play, stop, fast-forward, rewind, previous/next chapter, tray open/close, and still/pause operation.

1) Find the DVD player brand from the list of codes shown below.
2) Slide the first 2-way selector switch to “TV” and the other 2-way selector switch to “DVD”.
3) Press and hold down the DISPLAY button, then enter the first code number listed with the 10 key pad.
4) Release the DISPLAY button, and confirm the operation of the DVD player.

- If your DVD player does not respond to the first code, try the others listed. If it does not respond to any of the codes, try the search codes function on page 30.
- After you program your remote, some DVD buttons may not work properly. If so, use the DVD player’s remote.

DVD Player	Codes	DVD Player	Codes	DVD Player	Codes
Aiwa	043	Mintek	057	Sharp	028
Apex	040, 054, 055	Mitsubishi	025	Silvania	038
Bose	058	Next Base	056	SMC	048
Denon	020, 037	Onkyo	041, 052	Sony	024, 045, 046, 047
Funai	038	Oritron	044	Technics	020
Go–Video	032	Panasonic	020	Thomson	021
Harman Kardon	053	Philips	023, 036	Toshiba	023
Hitachi	031	Pioneer	022	Venturer	051
JVC	000	Polk Audio	036	Vialta	050
Kenwood	035, 020	Raite	033	Wave	042
KLH	051	RCA	021, 026	Yamaha	020, 049
Konka	039	Sampo	034	Zenith	027, 032
Koss	050	Samsung	030		

Quick Setup

Search Codes

Cable/Satellite Search Codes Function

1) Slide the first 2-Way Mode Selector switch to CATV.
2) Press the POWER and RETURN+/TV buttons. Hold for at least three seconds and release.
3) Press the POWER button on the remote, and see if the cable or satellite box responds.
4) If there was a response, press RETURN+/TV. The codes are now set. If there was no response, repeat Step 3. If you repeat Step 3 a total of 80 times without a response, use the remote control that came with your equipment.
5) Press RETURN+/TV to exit.

VCR/DVD Search Codes Function

1) Slide the first 2-way selector switch to “TV” and the other 2-way selector switch to “VCR” or “DVD”.
2) Press the VCR or DVD POWER and RETURN+/TV buttons. Hold for at least three seconds and release.
3) Press the VCR or DVD POWER button, and see if the VCR or DVD responds.
4) If there was a response, press RETURN+/TV. The codes are now set. If there was no response, repeat Step 3. If you repeat Step 3 a total of 80 times for the VCR (40 times for the DVD player), and there is no response, use the remote control that came with your equipment.
5) Press RETURN+/TV to exit.

Onscreen Menus

Using the Guide

Certain symbols are used throughout this guide to help you learn about the features of your new television. The ones you will see most frequently are:

▲▼ Up and Down arrows mean press the CH+ or CH– buttons. Pressing the CH+ or CH– buttons let you:
- Move vertically in a main menu screen
- Move through a submenu screen
- Move to the next letter, number, or other choice in a submenu
- Back up to correct an error
- Scan through TV channels (when not in a menu screen)

◀▶ Left and right arrows mean press the VOLUME+ or VOLUME- buttons to move left or right to:
- Select a highlighted menu item
- Select an item in a submenu
- Select numbers in certain menu options
- Turn the volume up or down (when not in a menu screen)

The "press button" icon means you should press the button named on your remote control. (Button names appear in SMALL CAPITAL LETTERS.)

The "helping arrow" icon points to the highlighted or selected item in a menu.

To bring up the onscreen menu, press the MENU button on the remote control. The item that appears in green is the one currently selected. If you use the Menu button on the TV's side panel instead of the remote, an additional menu screen showing VIDEO STATUS and ASPECT will appear between INITIAL SETUP and PICTURE ADJUST. The "interactive plug-in menu" will appear the first time the TV is plugged in.

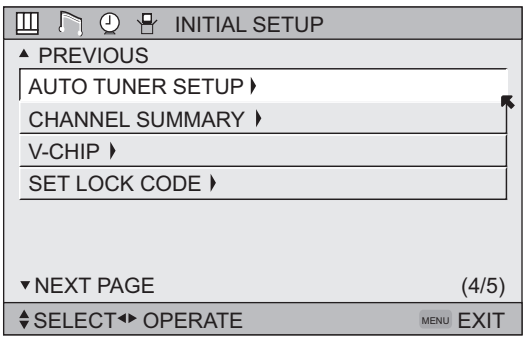

Note:

- Menus shown in this book are illustrations, not exact replications of the television's onscreen displays.

Onscreen Menus

The Onscreen Menu System

Your television comes with JVC's onscreen menu system. The onscreen menus let you make adjustments to your television's operation simply and quickly. Examples of the onscreen menus are shown on the next page. Detailed explanations on using each menu follow later in this guide. For information about the interactive plug-in Menu, see pages 24 - 26.

The Onscreen Menu System

To open the onscreen menu system, press the MENU button on the remote control. You navigate within the onscreen menus by using the four directional arrow buttons on the remote control. (These buttons are also the CH +/– and VOL +/– buttons. Channel and volume functions will not operate when the onscreen menu is active).

The selected feature and option on a menu screen are highlighted in a different color.

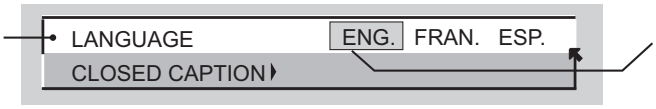

To move to a different feature use the ▲▼ arrows to move up or down the list. When you press the up arrow at the top of the list or the down arrow at the bottom, the next menu screen will appear. Use the arrows ◄ ► to select an option from the highlighted feature. Pressing MENU on the remote control will close the onscreen menu system and return you to normal television viewing.

Each menu and its features will be discussed in the following pages of this guide.

Notes:

- If you do not press any buttons for about a minute, the onscreen menu will automatically shut off.
- Button names in this guide are shown in SMALL CAPITAL LETTERS.
- Menus may appear in different sizes onscreen depending on the aspect ratio selected.
- Some menu items may not appear in menu screens when certain aspect ratios or inputs are selected.

Onscreen Menus

Press the MENU button

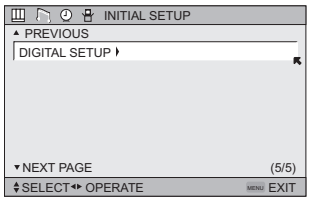

INITIAL SETUP 05

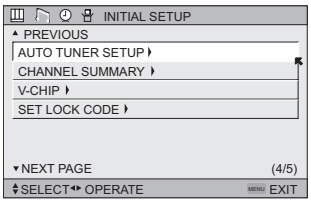

INITIAL SETUP 04

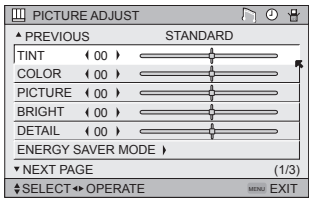

PICTURE ADJUST 01

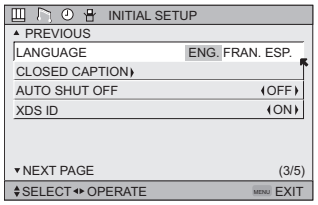

INITIAL SETUP 03

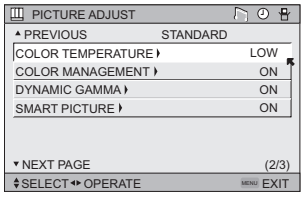

PICTURE ADJUST 02

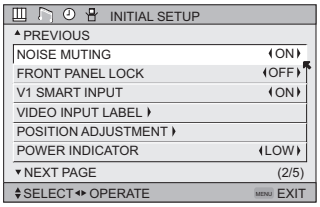

INITIAL SETUP 02

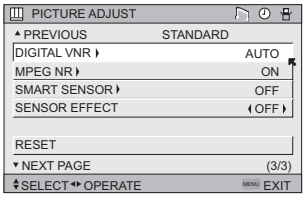

PICTURE ADJUST 03

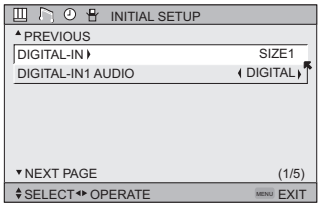

INITIAL SETUP 01

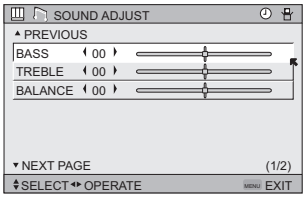

SOUND ADJUST 01

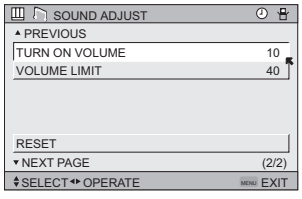

SOUND ADJUST 02

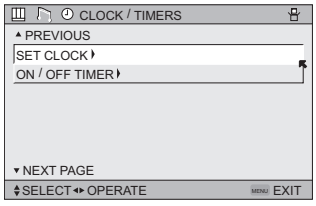

CLOCK/TIMERS

- The DIGITAL-IN menu can only be displayed when a 480p picture signal is input to the digital-in terminal and the picture is being displayed on the screen.
- When the Menu button on the TV side panel is pressed, the FRONT PANEL CONTROL menu between INITIAL SETUP 05 and PICTURE ADJUST 01 will appear.
- LT-32X667 does not have the V1 Smart Input feature.

Onscreen Menus

Auto Tuner Setup

The auto tuner setup function is described on page 26 as the interactive plug-in menu. If you need to run the auto tuner setup again, follow the steps below.

Press the MENU button

▲▼ To AUTO TUNER SETUP

◀▶ To operate

◀▶ To choose CABLE or AIR

Press the OK button to start

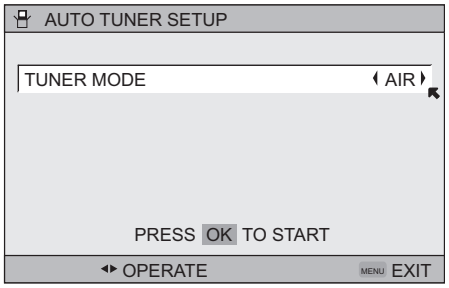

The auto tuner is finished when the message **PROGRAMMING OVER!** appears onscreen.

Note:

- Auto Tuner Setup in Digital Cable will take approximately 14 minutes.

Channel Summary

Channel summary allows you to customize the line-up of channels received by your TV. Regarding analog channels, you can add or delete channels from the line-up or prevent any unauthorized viewers from watching any or all 181 channels. Regarding digital channels, the only channels that will appear are the ones that are broadcasting.

Press the MENU button

▲▼ To CHANNEL SUMMARY

◀▶ To operate

The Channel summary screen will now be displayed with the channels set to scan marked with an "√". Regarding analog channels, you can delete channels from the scan by removing the "√". If any channels were missed during auto tuner setup and you wish to add them, you may by placing an "√" next to the channel number.

- Digital channels can not be added to the channel summary if the auto tuner setup did not find them.

▲▼◀▶ To the SCAN column

Press the OK button to include or delete from scan

Press the MENU button when finished

Analog Channels

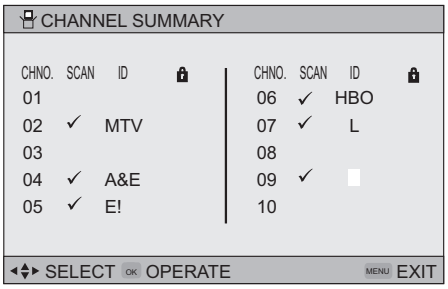

Digital Channels

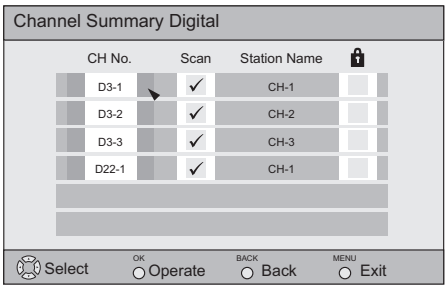

Note:

- The number of a digital channel may change, depending on the time of some broadcastings. If this channel existed and now had disappeared, the lock channel or scanned channel by the channel summary for that channel will be cancelled.

Onscreen Menus

How to set the channel label. ***(This is only for analog broadcasting.)***

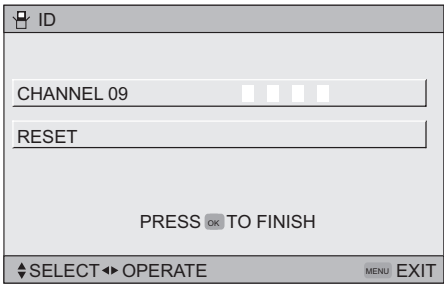

Press the MENU button

▲▼ To CHANNEL SUMMARY
◀▶ To operate
▲▼ To the ID column

Press the OK button to enter

◀▶ To select the character you want
▲▼ To move to the next space

...continue to follow these directions for all four spaces

Press the OK button to finish

Your characters are now set

Press the MENU button when finished

If you want to reset the characters you set:

Press the MENU button

▲▼ To CHANNEL SUMMARY
◀▶ To operate
▲▼ To the ID column

Press the OK button to enter

▲▼ To select RESET

Press the OK button to finish

Your characters are now reset

Notes:

- You can use characters for: Alphabet, numbers, marks and spaces.
- It is possible to set the maximum of 40 channel labels.
- If you try to set more than the 40 maximum, the message "MEMORY OVERFLOW" will appear.

You can block access to a channel by activating the channel lock.

Press the MENU button

▲▼ To CHANNEL SUMMARY

◀▶ To operate

▲▼◀▶ To the Lock Column (🔒)

Press the ZERO button to lock or unlock that channel

Press the MENU button when finished

Channel Guard Message

When a viewer attempts to watch a guarded channel, the following message appears:

To watch a channel that you have locked, enter the Lock Code using the 10 key pad.
If the wrong code is entered, the message "INVALID LOCK CODE!" will flash on the screen.

The channel cannot be accessed until the correct code is entered.

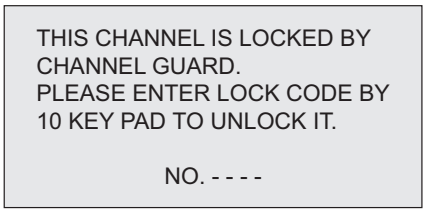

Notes:

- Once a channel has been unlocked, it will remain unlocked until the television is turned off.
- See also "Set Lock Code", page 43.

V-Chip

Your TV is equipped with V-Chip technology which enables you to block channels or content that you feel to be inappropriate for children, based on US and Canada rating guidelines. V-Chip has no effect on video signals from DVD discs or Camcorder connection.

Note: Some programs, and movies are broadcast without a ratings signal. Even if you set up V-CHIP ratings limits, these programs will not be blocked. See page 38 for information on how to block unrated programs.

Note (for Canadian viewers): The V-Chip function is based on specifications designed for the United States and therefore may not work properly in Canada.

You can customize the V-Chip settings of your television to match your personal tastes. The V-Chip menu below is the starting point for your V-Chip settings

You can use US V-Chip settings (for programming broadcast from the United States), Canadian V-Chip settings (for programming broadcast from Canada), and movie ratings. You may use any or all of the settings (US V-Chip, Canada V-Chip, Movie ratings). Descriptions for setting each of the three V-Chip formats appear in the next six pages along with descriptions of the rating categories.

To access the rating categories:

Press the MENU button

▲▼ To V-CHIP

◀▶ To operate (Lock icon will appear)

Press ZERO to access the V-Chip menu

◀▶ To turn V-Chip ON or OFF (V-Chip must be turned ON for rating settings to operate)

▲▼ To move to SET US TV RATINGS, SET MOVIE RATINGS, or SET CANADIAN RATINGS (see following pages for descriptions of each item)

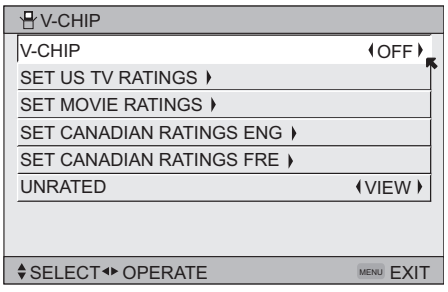

Onscreen Menus

Unrated Programs

Unrated programming refers to any programming which does not contain a rating signal. Programming on television stations which do not broadcast rating signals will be placed in the “Unrated Programming” category.

Examples of Unrated programs:

- Emergency Bulletins
- News
- Public Service Announcements
- Sports
- Some Commercials
- Locally Originated Programming
- Political Programs
- Religious Programs
- Weather

Note:

- TV programs or movies that do not have rating signals will be blocked if the unrated category is set to BLOCK.

Directions to Block Unrated Programs

You can block programs that are not rated.

Press the MENU button

▲▼ To V-CHIP

◀▶ To operate (The lock icon appears)

Press ZERO to access V-Chip setup options

▲▼ To UNRATED

◀▶ To VIEW or BLOCK

Press MENU when done

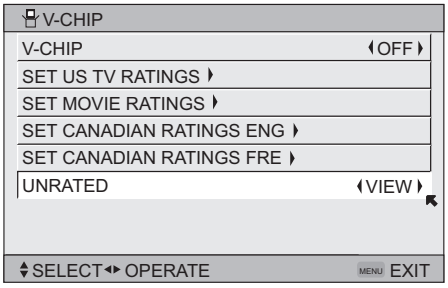

US V-Chip Ratings

U.S. PARENTAL RATING SYSTEMS

Programs with the following ratings are appropriate for children.

- ❒ **TV Y is Appropriate for All Children**
  Programs are created for very young viewers and should be suitable for all ages, including children ages 2 - 6.
- ❒ **TV Y7 is for Older Children**
  Most parents would find such programs suitable for children 7 and above. These programs may contain some mild fantasy violence or comedic violence, which children should be able to discern from reality.

Programs with the following ratings are designed for the entire audience.

- ❒ **TV G stands for General Audience**
  Most parents would find these programs suitable for all age groups. They contain little or no violence, no strong language, and little or no sexual dialog or situations.
- ❒ **TV PG Parental Guidance Suggested**
  May contain some, but not much, strong language, limited violence, and some suggestive sexual dialog or situations. It is recommended that parents watch these programs first, or with their children.
- ❒ **TV 14 Parents Strongly Cautioned**
  Programs contain some material that may be unsuitable for children under the age of 14 including possible intense violence, sexual situations, strong coarse language, or intensely suggestive dialog. Parents are cautioned against unattended viewing by children under 14.
- ❒ **TV MA Mature Audiences Only**
  These programs are specifically for adults and may be unsuitable for anyone under 17 years of age. TV MA programs may have extensive V, S, L, or D.

Viewing Guidelines

In addition to the ratings categories explained above, information on specific kinds of content are also supplied with the V-Chip rating. These types of content may also be blocked. The content types are:

- **V/FV** is for VIOLENCE/FANTASY VIOLENCE
- **S** stands for SEXUAL CONTENT
- **L** stands for strong LANGUAGE
- **D** stands for suggestive DIALOG

Onscreen Menus

Setting US V-Chip Ratings

Press the MENU button

▲▼ To V-CHIP
◀▶ To operate (lock icon appears)

Press ZERO to access the V-Chip menu

◀▶ To turn V-Chip ON or OFF

▲▼ To move to SET US TV RATINGS

◀▶ To operate

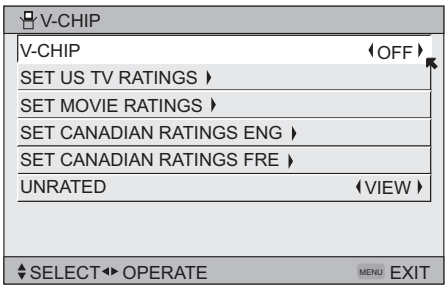

Directions to set US V-Chip Ratings

Line up the cursor in the column (TV PG, TV G, etc.) with the content row (V/FV, S, etc.) and press the ▲▼ or ◀▶ to move the cursor to the correct location. Press OK to turn the locking feature on or off. An item is locked if the icon appears instead of a "—".

For example. To block viewing of all TV 14 shows, move the cursor to the top row of that column and add a lock icon. Once you've put a lock on the top row, everything in that column is automatically locked.

▲▼◀▶ To the TV 14 Column

Press the OK button to lock

Press the MENU button when finished

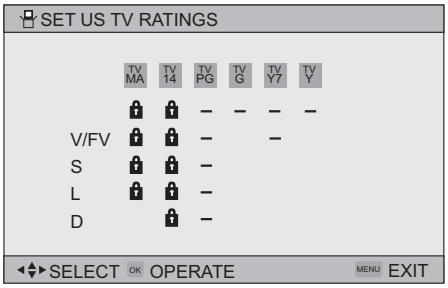

Note:

- If you want to change the setup, move the cursor to the top column and change the lock icon to "—" by pressing OK again. You may then select individual categories to block.

Movies Ratings

❒ **NR – Not Rated**
This is a film which has no rating. In many cases these films were imported from countries which do not use the MPAA ratings system. Other NR films may be from amateur producers who didn't intend to have their film widely released.

NR (Not Rated) Programming may contain all types of programming including children's programming, foreign programs, or adult material.

❒ **G – General Audience**
In the opinion of the review board, these films contain nothing in the way of sexual content, violence, or language that would be unsuitable for audiences of any age.

❒ **PG – Parental Guidance**
Parental Guidance means the movie may contain some contents such as mild violence, some brief nudity, and strong language. The contents are not deemed intense.

❒ **PG-13 – Parents Strongly Cautioned**
Parents with children under 13 are cautioned that the content of movies with this rating may include more explicit sexual, language, and violence content than movies rated PG.

❒ **R – Restricted**
These films contain material that is explicit in nature and is not recommended for unsupervised children under the age of 17.

❒ **NC-17 – No One Under 17**
These movies contain content which most parents would feel is too adult for their children to view. Content can consist of strong language, nudity, violence, and suggestive or explicit subject matter.

❒ **X – No One under 18**
Inappropriate material for anyone under 18.

Directions to set Movie (MPAA) Ratings

Press the MENU button

▲▼ To V-CHIP
◀▶ To operate (Lock icon appears)

Press ZERO to access V-Chip setup options

▲▼ To SET MOVIE RATINGS
◀▶ To enter movies menu

For example: To block viewing of programming rated NC-17 shows, move the cursor to the NC-17 column and add a lock icon. Once you've put a lock on the NC-17 column, X column is automatically locked.

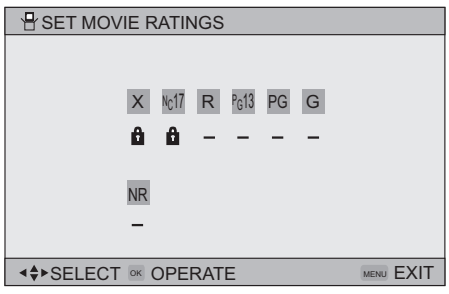

▲▼◀▶ To the NC-17 Column

Press the OK button to lock

Press the MENU button to finish

- If you want to change the setup, move the cursor to the column and change the lock icon to "—" by pressing OK again.

Onscreen Menus

Canadian V-Chip Ratings

- **E – Exempt**
  Exempt programming includes: news, sports, documentaries and other information programming, talk shows, music videos, and variety programming.
- **C – Programming Intended for Children**
  Violence Guidelines: There will be no realistic scenes of violence. Depictions of aggressive behavior will be infrequent and limited to portrayals that are clearly imaginary, comedic or unrealistic in nature.
- **C8+ – Programming Intended for Children 8 and Over** Violence Guidelines: Any realistic depictions of violence will be infrequent, discreet, of low intensity and will show the consequences of the acts. There will be no offensive language, nudity or sexual content.
- **G – General Audience**
  Programming will contain little violence and will be sensitive to themes which could affect younger children.
- **PG – Parental Guidance**
  Programming intended for a general audience, but which may not be suitable for younger children. Parents may consider some content not appropriate for children aged 8-13.
- **14+ – 14 Years and Older**
  Parents are strongly cautioned to exercise discretion in permitting viewing by pre-teens and early teens. Programming may contain mature themes and scenes of intense violence.
- **18+ – Adult**
  Material intended for mature audiences only.

Directions to set Canadian V-Chip Ratings

Press the MENU button

▲▼ To V-CHIP
◀▶ To operate (lock icon appears)

Press ZERO to access V-Chip setup options

▲▼ To SET CANADIAN RATINGS ENG (for English)
◀▶ To enter ratings menu

For example: To block viewing of programming rated 14+ shows, move the cursor to the 14+ column and add a lock icon. Once you've put a lock on the 14+ column, 18+ column is automatically locked.

◀▶ To the 14+ Column

Press the OK button to lock

Press the MENU button to finish

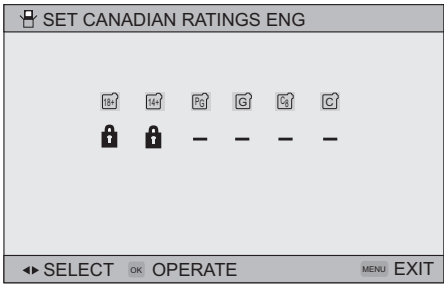

Notes:

- If you want to change the setup, move the cursor to the column and change the lock icon to "—" by pressing OK again.
- For instructions on "SET CANADIAN RATINGS FRE (in French)", please see page 42 in the French side of this user's guide.

Set Lock Code

Channel guard and V-Chip settings are protected by a four-digit lock code. Your TV comes preset with a lock code of “0000”. You may change the code to any four-digit number you wish. To change the lock code, follow the steps below.

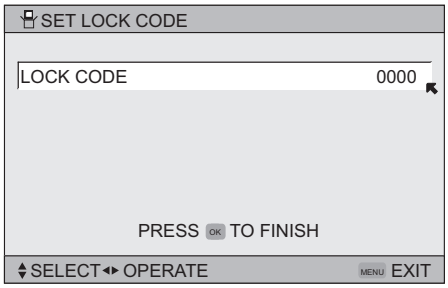

Press the MENU button

▲▼ To SET LOCK CODE

◀▶ To operate (lock icon appears)

Press ZERO to access the lock code

The first digit will be highlighted

◀▶ To select the number

▲▼ To move to the next digit

Continue to follow these directions for all four numbers

Press the OK button to finish (your lock code is now set)

Press the Menu button when finished

When a viewer attempts to watch a blocked channel, this message appears:

THIS PROGRAMMING EXCEEDS
YOUR RATING LIMITS.
PLEASE ENTER LOCK CODE BY
10 KEY PAD TO UNLOCK IT.
NO. - - - -

The channel will remain blocked until the correct lock code is entered (see above for information on setting your lock code).

Notes:

- After a power interruption you must reset the lock code.
- Write your lock code number down and keep it hidden from potential viewers.
- If you forget the lock code, a new code may be set using the steps listed above.

Onscreen Menus

Language

The language function is described on page 24 as the interactive plug-in menu. If you need to choose the language again, follow the steps below.

Press the Menu button

▲▼ To LANGUAGE

◀▶ To choose a language: ENG. (English), FRAN. (French) or ESP. (Spanish)

Press the MENU button when finished

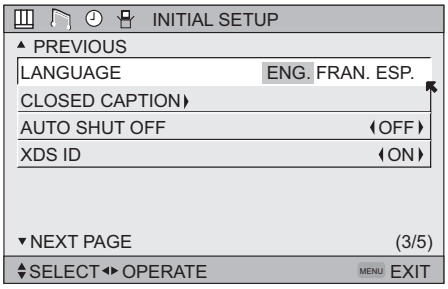

Onscreen Menus

Closed Caption

Many broadcasts now include an onscreen display of dialog called closed captions. Some broadcasts may also include displays of additional information in text form. Your television can access and display this information using the closed caption feature. To activate the closed caption feature, follow the steps below. There are three methods. When you are watching analog channels, you can perform Analog Setting of closed caption. When you are watching digital channels, you can perform Digital Auto Setting or Digital Manual Setting.

Analog Setting

Press the MENU button

▲▼ To CLOSED CAPTION
◀▶ To enter
▲▼ To MODE
◀▶ To select CAPTION or TEXT in MODE
▲▼ To CAPTION or TEXT
◀▶ To select a caption (CC1 to CC4) or text channel (T1 to T4)

Press the OK button to save

Press the MENU button when finished

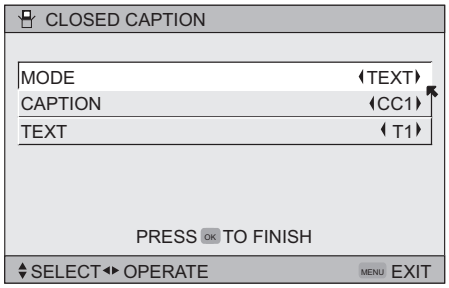

Digital Auto Setting

Press the MENU button

▲▼ To CLOSED CAPTION
◀▶ To enter
▲▼ To Type
◀▶ To select Auto, Advanced or Basic

Auto: *Shows closed caption a priority for digital channels over analog channels. It is set automatically.*
Advanced: *Shows only the digital closed caption.*
Basic: *Shows only the analog closed caption.*

▲▼ To Service
◀▶ To select 1, 2, 3, 4, 5 or 6
▲▼ To Appearance
◀▶ To enter
◀▶ To select Auto
▲▼ To Set

Press the OK button to save

The font/type and color are set automatically.

Press the MENU button when finished

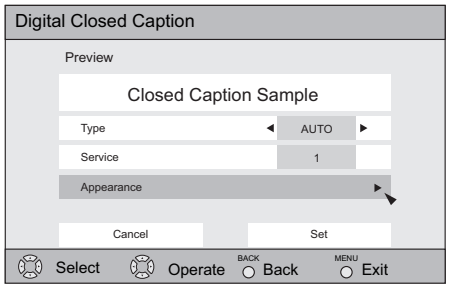

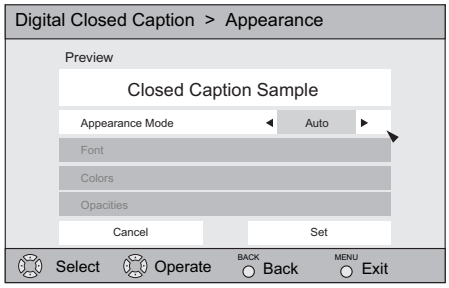

Note:

- If you want to cancel the settings, select cancel.

Onscreen Menus

Digital Manual Setting

Press the MENU button

▲▼ To CLOSED CAPTION

◀▶ To enter

▲▼ To Type

◀▶ To select Auto, Advanced or Basic

▲▼ To Service

◀▶ To select 1, 2, 3, 4, 5 or 6

▲▼ To Appearance

◀▶ To enter

◀▶ To select Manual

▲▼ To Font

◀▶ To enter

▲▼ To select Font Size or Font Style

◀▶ To select the setting you like

Font Size: Auto, Standard, Large or Small

Font Style: Auto, Serif Mono, Serif, Sanserif mono, Sanserif, Casual, Cursive or Small Capital

▲▼ To Set

Press the OK button to save

▲▼ To Colors

◀▶ To enter

▲▼ To select Text, Edge or Background

◀▶ To select the setting you like

Auto, White, Black, Red, Green, Blue, Yellow, Magenta or Cyan

▲▼ To Set

Press the OK button to save

▲▼ To Opacities

◀▶ To enter

▲▼ To select Text/Edge or Background

◀▶ To select Auto, Transparent, Translucent, Solid or Flashing

▲▼ To Set

Press the OK button to save

Press the MENU button when finished

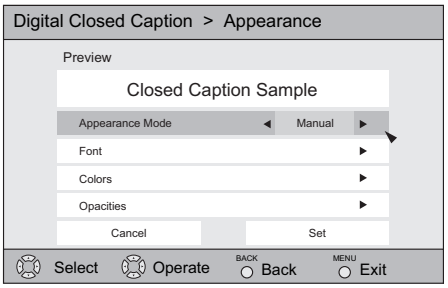

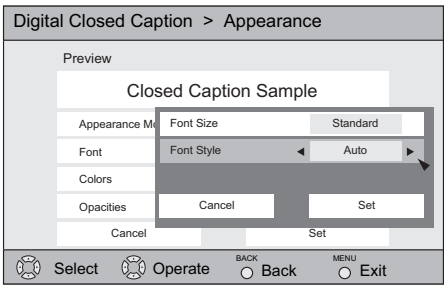

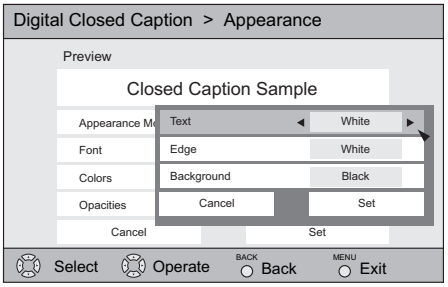

All fonts used for digital closed caption and digital menus are licensed from Monotype Imaging Inc.

Notes:

- Closed caption subtitles are usually found on closed caption channel CC1. Some programs may include additional text information which is usually found on text channel T1. The other channels are available for future use.
- Closed captioning may not work correctly if the signal being received is weak or if you are playing a video tape.
- Most broadcasts containing closed captioning will display a notice at the start of the program.
- To select the mode, press the C.C. button. See page 68.
- When ZOOM aspects like PANORAMA or CINEMA are selected, Digital Closed Captions may be cut off or distorted.

Auto Shut Off

This function automatically shuts off your TV when there is no signal from the channel the TV is on.

Press the MENU button

▲▼ To AUTO SHUT OFF
◀▶ To turn ON or OFF

Press the MENU button when finished

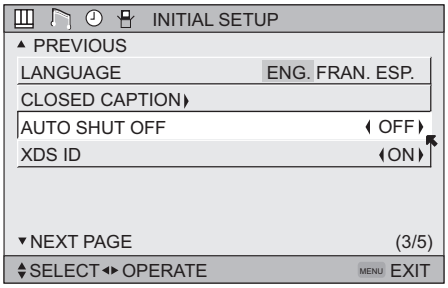

- If the channel that you have on does not receive a signal for more than one minute, the blinking text "NOT RECEIVING A SIGNAL AUTO SHUT OFF IN 9 MIN." appears on the screen, and starts the countdown. If no signal is being received within 10 minutes, the TV shuts itself off.

XDS ID

XDS ID Display provides a channel's call letters, the network's name, and even a program name. The XDS ID information is provided by the broadcaster.

Press the MENU button

▲▼ To XDS ID
◀▶ To turn ON or OFF

Press the MENU button when finished

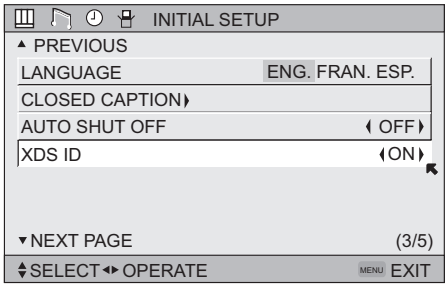

Onscreen Menu

Noise Muting

This feature inserts a blank gray screen over channels which are not broadcasting or are too weak to be received clearly.

Press the MENU button

▲▼ To NOISE MUTING
◀▶ To turn noise muting ON or OFF

Press the MENU button when finished

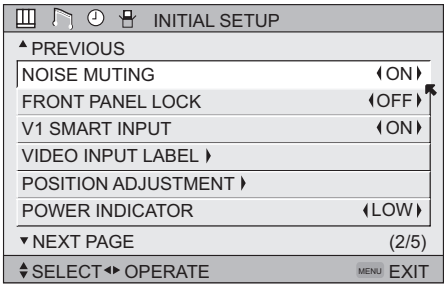

Notes:

- Noise muting will not work during auto tuner setup or when you operate channel summary.
- Noise muting will not work when the digital TV is displayed.

Front Panel Lock

This allows you to lock the keys on the side of the TV, so that a child may not accidentally change your viewing preferences.

Press the MENU button

▲▼ To FRONT PANEL LOCK
◀▶ To turn ON or OFF

Press the MENU button when finished

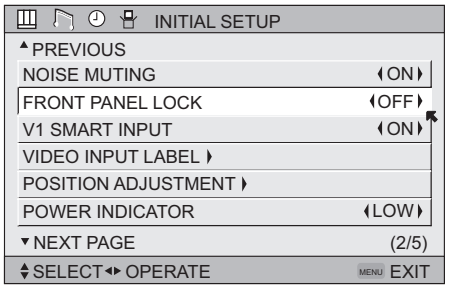

You can turn off this feature in the following ways:

- Unplug the power cord, and plug it back in. Do this if your batteries die, or you lose your remote control.
- Use the remote control.
- Press the MENU button on the side of the TV for more than 3 seconds. In this case, the OSD for FRONT PANEL LOCK will appear.

Note:

- To turn ON/OFF the TV, press the power button for more than 3 seconds. This feature will remain ON.

V1 Smart Input

LT-32X667 does not have the V1 Smart Input feature.

This feature is used if you have connected an AV Receiver to your television. By turning this feature on, your television can automatically detect the signal source from your components that are connected to your AV Receiver.

Press the MENU button

▲▼ To V1 SMART INPUT
◀▶ To turn ON or OFF

Press the MENU button when finished

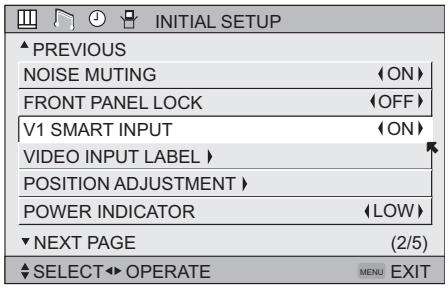

Notes:

- If you do not have an AV Receiver connected to your television, turn this feature OFF.
- Some AV Receivers may not work with this function.

Onscreen Menus

Video Input Label

This function is used to label video input connections for the onscreen displays.

Press the MENU button

▲▼ To VIDEO INPUT LABEL

◀▶ To enter

▲▼ To select the desired video input

◀▶ To select the desired preset input label (see chart below)

Press the OK button to save

Press the MENU button when finished

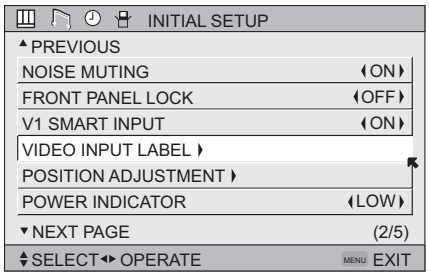

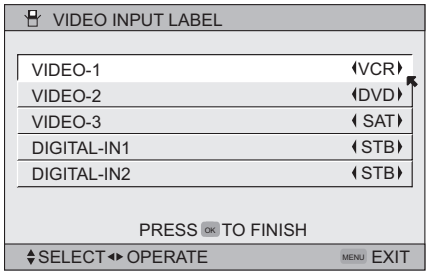

Preset Labels	Select when...
VCR	You have a VCR connected to the video input
DVD	You have a DVD connected to the video input
PVR	You have a Personal Video recorder connected to the video input
DVHS	You have a Digital VCR connected to the video input
STB	You have a Set-top Box connected to the video input
SAT	You have a Satellite Receiver connected to the video input
AMP	You have an Amplifier connected to the video input
GAME	You have a Video Game connected to the video input
CAM	You have a Video Camera connected to the video input
DISC	You have a Video Disc player connected to the video input

Onscreen Menus

Position Adjustment

Position adjustment allows you to adjust the position of the picture on the screen vertically when the aspect is set to panorama or cinema.

Press the MENU button

▲▼ To POSITION ADJUSTMENT

◀▶ To enter

▲▼ To adjust the position

Press the MENU button to finish

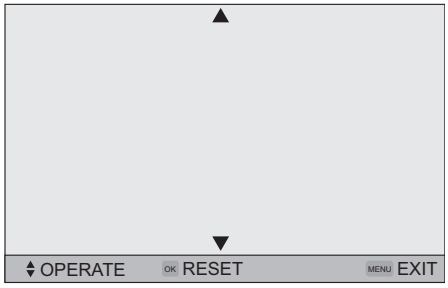

Notes:

- To reset the adjustment to the center, press the OK button.
- When the arrow disappears, while you are adjusting the position, the position is at its maximum limit.
- If you select Regular size, Slim size and Full size with aspect or Multi Screen, position adjustment option is not seen.
- When you change the screen size, perform the position adjustment again.
- Position adjustment allows you to adjust the screen position vertically and horizontally when the aspect is set Panorama Zoom or Cinema Zoom for 1080i and 720p signals, or when PC mode is set.
- It is also possible to use Position Adjustment when you are in PC Mode

Power Indicator

Power indicator allows you to adjust the brightness of the power indicator

Press the MENU button

▲▼ To POWER INDICATOR

◀▶ To adjust POWER INDICATOR LOW, HIGH or OFF

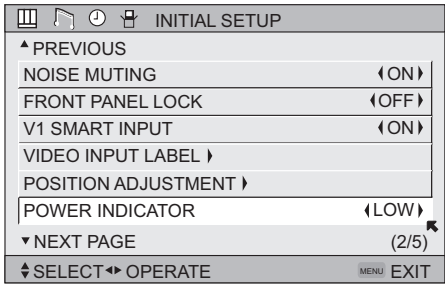

Notes :

- When OFF is selected :
  The LED disappears if you have a TV signal.
  The LED is lit as “LOW” when there is no TV signal.
- When the On Timer turns ON, the LED is lit as "LOW" when you turn the power off.
- If you set a timer on the TV, the power indicator will light even if the TV is on stand by.

Onscreen Menus

Digital-In

The DIGITAL-IN option can only be displayed in the INITIAL SETUP menu when an HDMI480p picture signal is being input to the DIGITAL-IN terminal. This option adjusts the position when an HDMI or DVI 480p picture signal is being displayed on the screen. There are two types of HDMI480p picture signals: 640x480 and 720x480. If the displayed picture is slightly shifted, the position can be adjusted by selecting either SIZE1 or SIZE2.

Press the MENU button

▲▼ To DIGITAL-IN

◀▶ To enter

▲▼ To select AUTO, SIZE1 or SIZE2

Press the MENU button to finish

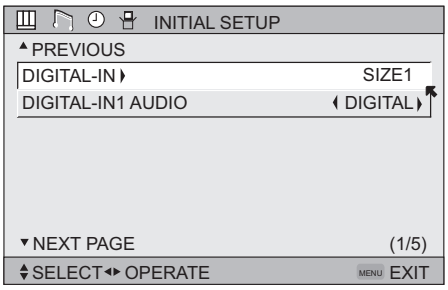

Notes:

- The DIGITAL-IN menu can only be displayed when a HDMI or DVI 480p picture signal is input to the Digital-In terminal and the picture is being displayed on the screen.
- You can select AUTO only when the signal is 480p for HDMI. When you select AUTO, the televison will select "SIZE1" or "SIZE2" automatically.

Digital-in1 Audio

This feature is used if you have a DTV or HDMI compatible component connected to your TV.

Press the MENU button

▲▼ To DIGITAL-IN1 AUDIO

◀▶ To select ANALOG, DIGITAL or AUTO

Press the Menu button when finished

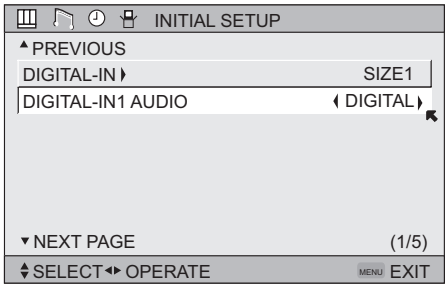

Notes:

- If you connect the HDMI device to the HDMI 1, choose DIGITAL. If you connect the DVI device to the HDMI 1, choose ANALOG.
- Refer to your DTV or HDMI component's instruction manual for more information.
- When you select AUTO, the television will select "ANALOG" or "DIGITAL" automatically, depending on the audio input from the HDMI.
- When you select DIGITAL, select PCM on Digital Sound menu. See page 54.

Onscreen Menus

Digital Setup

Use this function when you are receiving a digital broadcast.

Press the MENU button

▲▼ To DIGITAL SETUP

◀▶ To enter

The onscreen will appear

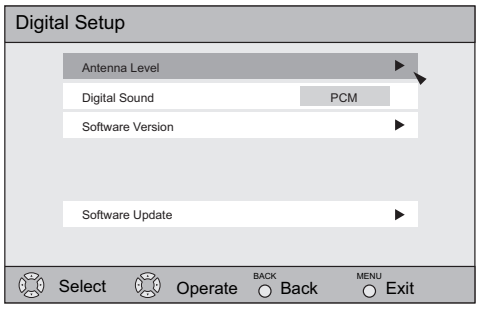

Notes:

- Software Update will only appear when the SD Card is inserted.
- If you are watching an analog channel, you can still access the digital setup menu at anytime, while you are doing this, the background screen will turn blank. In this case, the tuner will switch to digital, since you are accessing the digital setup menu.

Antenna Level

Confirms the present antenna level.

Press the MENU button

▲▼ To DIGITAL SETUP

◀▶ To enter

▲▼ To Antenna Level

◀▶ To enter

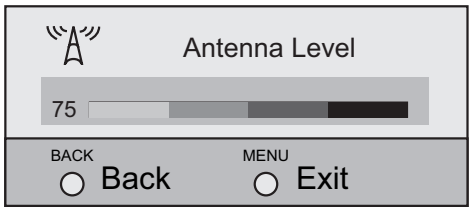

Onscreen Menus

Digital Sound

You can select the optical digital sound output, either PCM or Dolby Digital when your TV is connected to an amplifier that has Dolby Digital decoder. If you select Dolby Digital, you can enjoy listening in 5.1ch sound when watching digital broadcasts.

Press the MENU button

▲▼ To DIGITAL SETUP
◀▶ To enter

▲▼ To Digital Sound

◀▶ To select PCM or DOLBY DIGITAL

Press the MENU button when finished

Notes:

- If your amplifier does not have Dolby Digital decoder, select PCM. If you don't select PCM, it cannot output the sound from the speakers.
- For connecting an amplifier using the optical output, see page 21.

DOLBY DIGITAL

Manufactured under license from Dolby Laboratories. "Dolby", and the double-D symbol are trademarks of Dolby Laboratories.

Software Version

You can confirm the Software Version.

Press the MENU button

▲▼ To DIGITAL SETUP
◀▶ To enter

▲▼ To Software Version

◀▶ To enter

◀▶ Select close when you are finished confirming your software version

Press the MENU button when finished

Software Update

At first, insert the SD(Multi-media) card into the memory card slot. This function will appear only when you insert an SD Card.

Press the MENU button

▲▼ To DIGITAL SETUP
◀▶ To enter
▲▼ To Software Update
◀▶ To enter
▲▼ Checks the card if it needs an update or not

Press the MENU button when finished

Onscreen Menus

Picture Settings

These settings allow you to change and adjust the way the picture appears on your television.

TINT
Tint allows you to adjust the levels of red and green in your TV picture.

COLOR
The color function lets you make all the colors in the TV picture appear either more vivid or subtle.

PICTURE
Picture allows you to adjust the levels of black and white on the TV screen, giving you a darker or brighter picture overall.

BRIGHT
You can adjust the overall brightness of the TV picture with the Bright control.

DETAIL
The Detail feature adjusts the level of fine detail displayed in the picture.

ENERGY SAVER MODE
The energy saver mode adjusts the level of brightness on the TV screen.

Adjust the Picture Settings

Press the MENU button

▲▼ To TINT, COLOR, PICTURE, BRIGHT, DETAIL or ENERGY SAVER MODE

◀ ▶ To enter

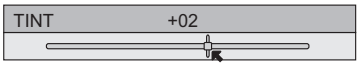

◀ ▶ To adjust the setting

▲▼ To move to the next setting

Press the MENU button when finished

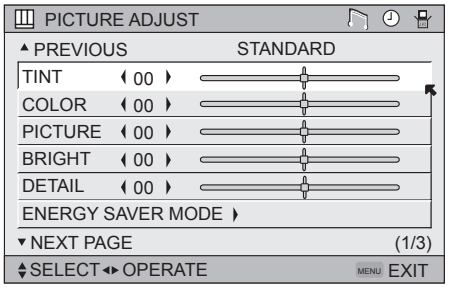

Color Temperature

You can decide how strong or dull the colors appear on the TV screen.

Press the MENU button

▲▼ To COLOR TEMPERATURE

◀ ▶ To enter

▲▼ To set LOW or HIGH

Press the MENU button when finished

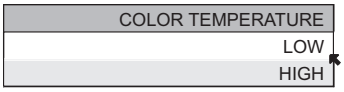

Onscreen Menus

Color Management

This TV supports the COLOR MANAGEMENT function to ensure dull colors are compensated to produce natural hues.

Press the MENU button
▲▼ To COLOR MANAGEMENT
◀▶ To enter
▲▼ To select the mode “ON" or "OFF"
Press the MENU button when finished

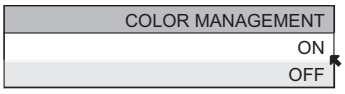

Dynamic Gamma

JVC's Dynamic Gamma Circuitry (DGC makes it easier to see dark areas when a picture has many dark areas, and makes it easier to see the bright areas when a picture has many bright areas. DGC is turned on, DGC analyzes and adjusts the total level of picture brightness balance, especially in dark areas where the level of grayscale is often lost, turning completely to black DGC automatically enhances the detail in these dark areas providing a more dynamic image with finer detail, so the optimum picture settings are automatically set for each picture. Normally use with DGC on.

Press the MENU button
▲▼ To DYNAMIC GAMMA
◀▶ To enter
▲▼ To turn ON or OFF
Press the MENU button when finished

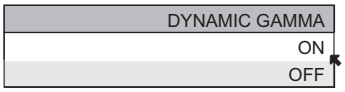

Smart Picture

Smart Picture detects the APL (Average Picture Level) and adjusts the contrast suitable for what you are watching.

Press the MENU button
▲▼ To SMART PICTURE
◀▶ To enter
▲▼ To select the mode "ON" or "OFF"
Press the MENU button when finished

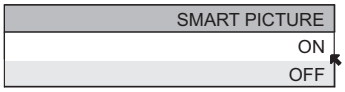

Note:

- When you have "DYNAMIC" selected in the "VIDEO STATUS", Smart Picture is not selected.

Digital VNR

This function can be selected to change the effect of Digital VNR (Video Noise Reduction).

Press the MENU button

▲▼ To DIGITAL VNR

◀▶ To enter

▲▼ To select the effect you like

AUTO: adjusts the effect of VNR automatically
MIN: adjusts the effect of VNR to minimum
MAX: adjusts the effect of VNR to Maximum
OFF: turns the effect of VNR off

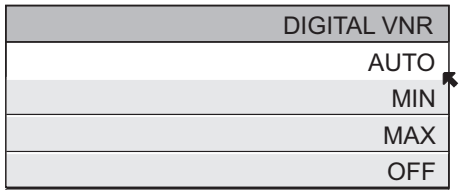

Press the MENU button when finished

Note:
- If it is in PC, Digital VNR will not be displayed.

MPEG NR

This function effects the block noise removal and mosquito NR (Noise Reduction) simultaneously.

Press the MENU button

▲▼ To MPEG NR

◀▶ To enter

▲▼ To select ON or OFF

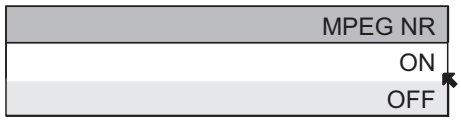

Press the MENU button when finished

Note:
- When you are receiving digital channels, block noise removal will have no effect.

Smart Sensor

This function automatically adjusts the brightness on your TV according to the amount of light in the room.

Press the MENU button

▲▼ To SMART SENSOR

◀▶ To enter

▲▼ To select ON or OFF

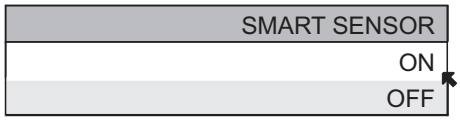

Press the MENU button when finished

Onscreen Menus

Sensor Effect

With Sensor Effect ON, a "leaf" icon will appear on your TV screen when Smart Sensor brightness adjustment occurs.

Press the MENU button

▲▼ To SENSOR EFFECT

◀▶ To enter

▲▼ To select ON or OFF

Press the MENU button when finished

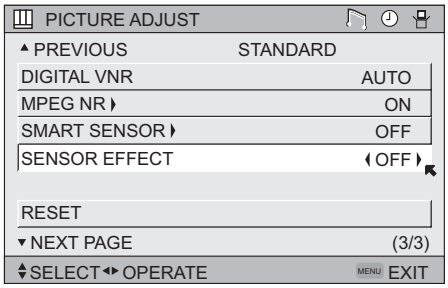

Reset

Reset resets all picture adjustments (tint, color, picture, bright, detail, color temperature, dig. noise clear, Color Management, Dynamic Gamma and Smart Picture) at once to the default settings.

Press the MENU button

▲▼ To RESET

◀▶ To enter

The onscreen menu disappears for a moment, and then the settings are reset to the default setting for all the picture adjustments.

Press the MENU button when finished

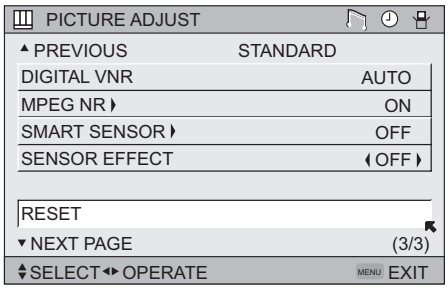

Onscreen Menus

Sound Settings

These settings allow you to change and adjust the sound on your television.

BASS – You can increase or decrease the level of low-frequency sound in the TV's audio with the bass adjustment.

TREBLE – Use treble to adjust the level of high-frequency sound in your TV's audio.

BALANCE – Adjust the level of sound between the TV's left and right speakers with the balance setting.

Adjust the Sound Settings

Press the MENU button

▲▼ To BASS, TREBLE or BALANCE

◀ ▶ To adjust the setting

▲▼ To move to the next setting

Press the MENU button when finished

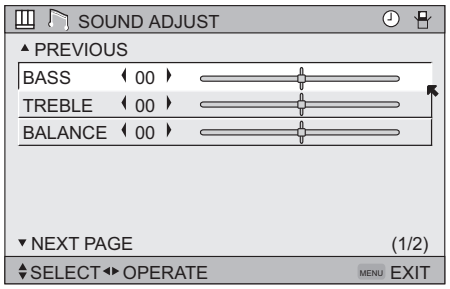

Note:

- You can reset the sound adjustments (BASS, TREBLE and BALANCE) you set at once as the default setting when you select reset. See page 58.
- You can adjust BALANCE only when A.H.S.+ is off. See page 65.

Turn On Volume

Turn On Volume allows you to set the volume level when you turn the TV on.

Press the MENU button

▲▼ To TURN ON VOLUME

◀▶ To set

Current ⟷ 00 ⟷ 01 ⟷ 02 ⟷ 03 ⟷ 48 ⟷ 49 ⟷ 50

Press the MENU button to finish

Volume Limit

Volume Limit allows you to set the maximum volume level.

Press the MENU button

▲▼ To VOLUME LIMIT

◀▶ To set the maximum volume level

00 ⟷ 01 ⟷ 02 ⟷ 03 ⟷ 48 ⟷ 49 ⟷ 50

Press the MENU button to finish

Reset

Reset resets all Sound Adjustments (Bass, Treble and Balance) at once to the default settings. See page 58 on how to use reset.

Set Clock

The set clock function is described on page 25 as the interactive plug-in menu. You can choose to set the clock automatically or manually. If you need to set the clock again, follow the steps below.

Press the MENU button

▲▼ To SET CLOCK
◀▶ To enter

When you set the clock automatically, choose AUTO by pressing the ◀ or ▶ arrows.

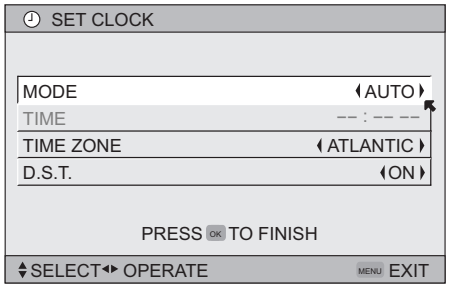

▲▼ To TIME ZONE
◀▶ To select your time zone

ATLANTIC ⟷ EASTERN ⟷ CENTRAL ⟷ MOUNTAIN ⟷ PACIFIC ⟷ ALASKA ⟷ HAWAII

▲▼ To D.S.T. (daylight savings time)
◀▶ To turn D.S.T. ON or OFF

Press OK to finish

Press the MENU button when finished

When you set the clock manually, choose MANUAL by pressing the ◀ or ▶ arrows.

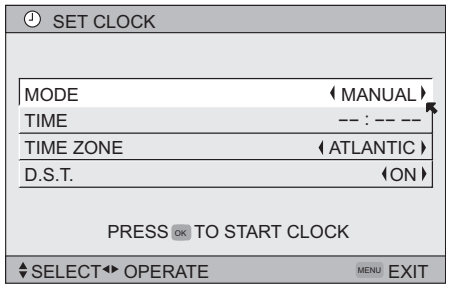

▲▼ To move to the hours
◀▶ To set the hours
▲▼ To move to minutes
◀▶ To set the minutes
▲▼ To TIME ZONE
◀▶ To select your time zone:
(Atlantic, Eastern, Central, Mountain, Pacific, Alaska or Hawaii)
▲▼ To D.S.T. (daylight savings time)
◀▶ To turn D.S.T. ON or OFF

Press OK to start clock

THANK YOU !!

Press the MENU button when finished

Notes:

- D.S.T. can be used when it is set to ON in the SET CLOCK menu.
- Only when the MODE set to AUTO, the Daylight Savings Time feature automatically adjusts your TV's clock for Daylight Savings. The clock will move forward one hour at 2:00 am on the first Sunday in April. The clock will move back one hour at 2:00 am on the last Sunday in October.
- You will have to reset the clock after a power interruption. You must set the clock before operating any timer functions.

Onscreen Menus

On/Off Timer

The on/off timer lets you program your television to turn itself on or off. You can use it as an alarm to wake up, to help you remember important programs, or as a decoy when you're not home.

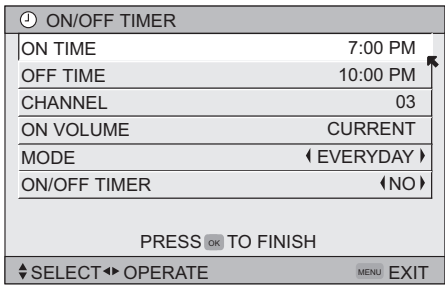

- Press the MENU button
- ▲▼ To ON/OFF TIMER
- ◀▶ To enter (begins with ON TIME)
- ◀▶ To set the hour (AM/PM) you want the TV to turn on
- ▼ To move to minutes
- ◀▶ To set the minutes
- ▼ To accept ON TIME and move to OFF TIME (the time the TV will turn off). Set the OFF TIME the same way as ON TIME
- ▼ To accept OFF TIME and move to CHANNEL
- ◀▶ To select channel
- ▼ To ON VOLUME
- ◀▶ To set the volume level
- ▼ To move to MODE
- ◀▶ Choose ONCE or EVERYDAY
- ▼ To ON/OFF TIMER
- ◀▶ Choose YES to accept the timer setting, choose NO if you don't wish to accept
- Press the OK button to finish
- Press the MENU button to exit the menu

Notes:

- The on/off time cannot be set to locked or guarded channels.
- In order for the on/off timer to work, the clock must be set.
- After a power interruption, the timer settings must be reset.
- The digital channel is set only set to the marked channel in channel summary.
- The blocked channel cannot be set.

Button Functions

Multi Screen Function

Your television has two kinds of screen: SPLIT (2 channels) and INDEX (12 channels).

Note: After you press any multiscreen buttons, if you press the menu button, only the picture adjust screen will appear.

Split

Activate the split-screen option by pressing SPLIT on the remote control. The channel (or input) you were watching before pressing SPLIT will appear on the left, the new channel will appear on the right. The sound will continue to come from the main screen channel (or input). To turn split-screen off and return to normal television viewing, press SPLIT again or press the BACK button.

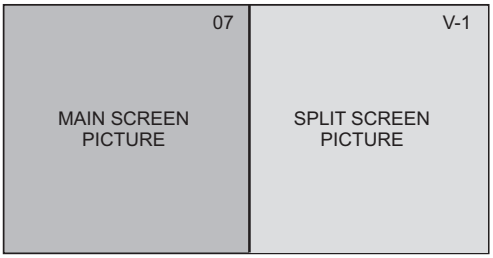

Notes:

- If the signal that you are watching is coming from the HDMI input, you cannot enter the SWAP or INDEX mode.
- Main Screen and Split Screen will not display the same channel or input at the same time.
- Split screen will not display digital channel.
- You can enter the SPLIT mode when the screen is in NORMAL or INDEX mode.
- Split-screen functions will not work with locked channels or channels blocked by V-Chip ratings limits. A gray screen will display instead.
- With split screen, the picture from the component terminal and DIGITAL-IN terminal will not be displayed.
- The aspect of MAIN CHANNEL PICTURE becomes 16:9 when you input the picture of 480p, 720p and 1080i from the component terminal and DIGITAL-IN terminal.
- After you press the SELECT button, and select SPLIT SCREEN when you press the OK button, select normal screen. If you don't operate, the MAIN CHANNEL SCREEN will be automatically selected about 8 seconds later.
- Aspect does not work in SPLIT mode.
- When it is PC output, Main and Split screen will not be displayed.
- When you are in PC mode, SPLIT, INDEX or FREEZE can not be used.
- When you press the Menu button in SPLIT mode, it appears only as Picture Adjust menu.

Button Functions

Index

This allows you to quickly look at up to 12 channels at a time so that you can decide which one to watch.

1	2	3	4
5	6	7	8
9	10	11	12

Notes:

- Only analog channel input signal will be displayed.
- You can watch the channel added in channel summary. See page 35.

Freeze

Pressing the FREEZE button causes the screen to change to the split-screen display with the still picture displayed on the right. In order to return to the normal display, press the FREEZE button once again.

Swap

You can exchange the channel (or input) displayed in the split screen window for the main screen image by pressing the SWAP button.

Note:

- It will only work in SPLIT mode.

Select

With SELECT, you can select the picture (channel) while viewing SPLIT screen. When you press SELECT button, the channel number on the top will be highlighted. Each press of SELECT will shift the channel.

Menu

The MENU button allows you to access JVC's onscreen menu system. Press MENU to activate the onscreen menu system.

- See individual topics like "Sound Adjust" for specific information on using menus.

OK

This button confirms your selection when you are in one of the onscreen menus.

Back

This button allows you to go back in the menu to change a selection or correct a mistake.

Button Functions

Power

Turns the TV on or off.

Press the POWER button

Note:

- After turning the power on, you can not turn the power off for about one minute.

Number Buttons - 10Key Pad

Use the number buttons on the remote control to move directly to a specific channel. For example, to move to channel 12:

0 (Zero)

1 (One)

2 (Two)

Tune

Lets you decide the input channel and select it. After you press the number buttons on the remote, press the TUNE button. For example, to move to channel 12:

1 (One)

2 (Two)

Press the TUNE button

Input

Selects the signal input source for the television: VIDEO-1, 2, 3, DIGITAL-IN1 or DIGITAL-IN2 for video devices like VCRs, DVD players or camcorders.

Press the INPUT button

By every press of the INPUT button, you can change the input mode.

Notes:

- When you return to TV mode, press the RETURN +/TV button or direct 10 key pad or CHANNEL +/– button.
- You can also access by pressing the INPUT button on the side of the TV instead of the remote control.
- If you have a PC connected to the TV, select VIDEO-3.

TheaterPro D6500K

The TheaterPro D6500K color temperature technology function makes sure that the video you watch is set to the standard color temperature, so that what you see is as true to what the film to video editors intended it to be.

Press the THEATERPRO button

Button Functions

Return +/TV

The RETURN+/TV button has three functions:

Return - Returns to the channel viewed just before the channel currently onscreen.

Return+ - Lets you program a specific channel to return to while scanning through the channels using the CH+ and CH– buttons.

TV - Returns to the TV mode.

Press the RETURN+/TV and hold for three seconds

RETURN CHANNEL
PROGRAMMED!

The channel currently active has been programmed as your return+ channel. Now scan through the channels using the CHANNEL+/– buttons.

Press the RETURN+/TV

You will return to your programmed channel.

- To cancel your return+ channel, press and hold the RETURN+ button for three seconds. The message “RETURN CHANNEL CANCELLED!” will appear.
- Return+ works only with the Channel+/– buttons. Pressing any number key will cancel return+.

Sound

By pressing the SOUND button, you can change the A.H.S.+ (Advanced Hyper Surround plus) mode, A.T.C. (Advanced Tone Correction), SMART SOUND, MaxxBass or HYPER BASS on or off.

A.H.S.+ - Adds a more spacious surround sound. Music gives basic effect and movie for more effect.

A.T.C. - Reproduces distinctive sounds with tone correction.

SMART SOUND - Decreases high sound levels, giving a regulated sound level.

MaxxBass - Emphasizes the bass sound **(LT-40X887, LT-40X787, LT-40X667, LT-37X887, LT-37X787 and LT-37XM57)**

HYPER BASS - Increases bass levels, giving a richer, deeper bass.

(LT-32X887, LT-32X787 and LT-32X667)

Press the SOUND button

▲▼ To select A.H.S.+, A.T.C., SMART SOUND, MaxxBass or HYPER BASS

◀▶ To choose the setting

Press the MENU when finished

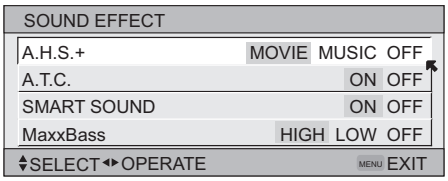

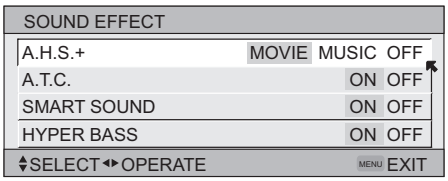

MaxxBass is a registered trademark of Waves Audio Ltd. in the USA, Japan and other countries.

Notes:

- Smart Sound may become an unnatural effect, depending on the signal source.
- You can adjust BALANCE only when A.H.S.+ is off.
- When headphones are being used, MaxxBass or HYPER BASS can not be selected.

Button Functions

Video Status

The VIDEO STATUS button gives you a choice of four TV picture display settings, including a display of your own preferences.

Standard - Resets the picture display to the factory settings.

Dynamic - Gives a vivid picture with better contrast when viewing in a brightly lit room.

Theater - Gives a rich, film-like look to video when viewing in a dimly lit room.

Game - Used for when you are playing video games connected to your TV.

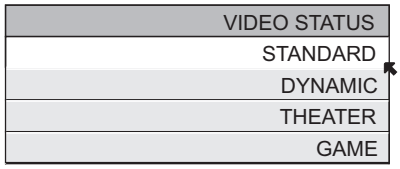

Press the VIDEO STATUS button
By every press of the VIDEO STATUS button, you change the mode.

Note:

- You can also change the mode by pressing the ▲▼ buttons.
- Each mode is memorized for each input connected to the TV.
- You can also access the FRONT CONTROL PANEL screen by using the MENU button on the side of the TV instead of the remote control. It appears between INITIAL SETUP and PICTURE ADJUST screen, and it has VIDEO STATUS and ASPECT menus. Choose VIDEO STATUS by pressing MENU ▼ on the side panel and choose a mode by using the CHANNEL +/- buttons (◀ OPERATE ▶).
- There are four video status settings: Dynamic, Standard, Theater and Game. Each video status setting has a separate memory for HD (1080i/720p) and SD (480p/480i) video signal. Each video status can be chosen along with your favorite picture settings (Tint, Color, Picture, Bright, Detail, etc.)
  - – When an HD signal is displayed: Your HD settings are recalled for the video status you are using.
  - – When an SD signal is displayed: Your SD settings are recalled for the video status you are using.
  - – This function considers PC input as an HD signal and PIP and SPLIT screens as an SD signal.

Natural Cinema

Natural cinema corrects the problem of blurred edges which may occur when viewing a program originally shot on film (such as motion pictures) or animation. If you notice blurring at the edges of these programs, press NATURAL CINEMA and set it to AUTO. Natural Cinema helps correct conversion errors that occur when film, which is shot at 24 frames-per-second, is broadcast at the television rate of 30 frames-per-second.

Press the NATURAL CINEMA button

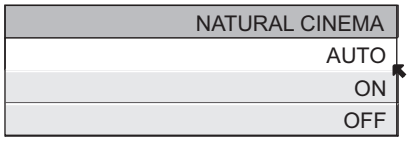

Notes: The natural cinema mode is automatically set to "AUTO" in the following cases:

- Turning on or off
- Changing the channel or input mode
- Using multi-screen functions
- If you are in PC mode, Natural Cinema can not be used.

Button Functions

Sleep Timer

The Sleep Timer can turn the TV off for you after you fall asleep. Program it to work in intervals of 15 minutes, for a total time of up to 180 minutes.

Press the SLEEP button

0 15 30 45 60 75 90 105 120 135 150 165 180

Sleep Timer Message

60 seconds before the automatic shutoff, this message will appear:

GOOD NIGHT!!
PUSH SLEEP TIMER BUTTON
TO EXTEND

You then have 60 seconds to press the SLEEP button to delay the shut off for another 15 minutes.

ML/MTS

MTS technology allows several audio signals to be broadcast in analog at once, giving you a choice in what you wish to hear with a TV program. In addition to mono or stereo sound, an MTS broadcast may also include a second audio program (SAP).

Press the ML/MTS button

By every press of the ML/MTS button, you change the mode

	MTS
ON AIR	STEREO
ON AIR	SAP
	MONO

Notes:

- When you are receiving a digital broadcast, if there are other languages, you can change the language by pressing the ML/MTS button.
- Keep the TV in stereo mode to get the best sound quality. The sound will work in stereo mode even if a certain broadcast is in mono sound only.
- Choose the mono setting to reduce excessive noise on a certain channel or broadcast.
- Selecting SAP will allow you to hear an alternative soundtrack, if one is available.
- MTS unavailable if your television's Input source is in input 1, 2 or 3 mode, as described on page 64.
- ML/MTS will not work when you are using the Digital-In.
- You can also change the mode by pressing the ▲▼ buttons.

Muting

The MUTING button instantly turns the volume down completely when you press it. Press MUTING and the volume level will instantly go to zero. To restore the volume to its previous level, press MUTING again.

Button Functions

Display

The display screen shows the current status of timers, inputs and XDS ID.

Press the DISPLAY button

The screen to the right shows the following information:

- The current channel or AV input (Channel 05)
- The current time (12:20 pm)
- Sleep timer status/minutes remaining (The Sleep Timer is off)
- On/off timer status (Set to turn on everyday at 7:00 PM, off at 10:00 PM)
- Each Press of the DISPLAY button changes the display mode:

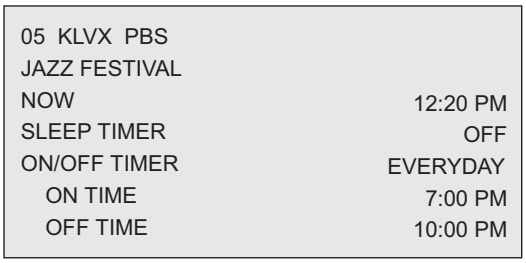

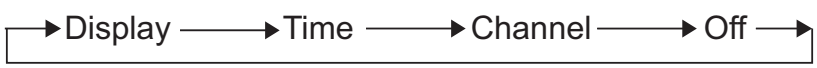

Display - Full screen shown above

Time - Shows the current time only

Channel - Shows the current channel

Off - Turns display off

Notes:

- You may also turn off the display at any step by pressing MENU.
- If the clock, sleep timer or on/off timer are not set, the display screen will show: "CLOCK NOT SET", "SLEEP TIMER OFF", and "ON/OFF TIMER OFF" respectively.

C.C. (Closed Caption)

Use the C.C. (Closed Caption) button to select the mode of closed caption.

Press the C.C. button

Notes:

- SMART CAPTION will appear when you press the MUTING button, only on channels where the broadcast contains closed captioning.
- When you select ON, it will be the mode selected in the Closed Caption Menu.
- See page 45 when you set the caption/text mode.
- You can also change the mode by pressing the ▲▼ buttons.
- If you are in PC mode, C.C. can not be used.

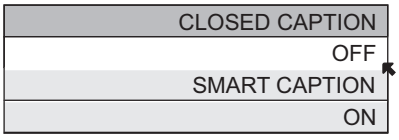

Channel +/–

Use these buttons to move up or down all the available channels your TV is able to receive.

Volume +/–

Use these buttons to raise or lower the TV's volume level. The maximum is the level you set in Volume Limit. See page 59.

Button Functions

Favorite

The Favorite button allows you to select your favorite channels easily. First, you must register the channels that you like. See how to register below.

Press the FAVORITE button
The favorite channel list will appear.

▲▼ To select the channel you want to watch

Press the OK button
It will change to the channel you have selected.

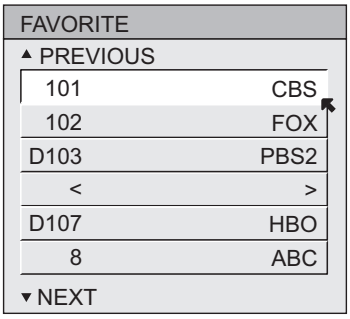

Register the favorite channel

Press the channel number you want to register
The channel program will change.

Press the FAVORITE button for three seconds
The channel will be registered in the favorite channel list.

Notes:

- Both analog and digital channels can be registered. The digital channels have a "D" in front of the channel number.
- The maximum number of channels you can register is 24.
- If you have registered the maximum number of channels, and try to register more channels, the oldest channel you registered will be deleted.
- Sub channels can not be registered.
- The newest channel you registered will appear at the top of the list.

Delete the favorite channel

Press the FAVORITE button
The favorite channel list will appear.

▲▼ To select the channel you want to delete
◀▶ To enter
Press the OK button
The channel was deleted.

Press the FAVORITE button when finished

Note:

- Before pressing the FAVORITE button when you are finished, press the ◀▶ button again, and you can return to the deleted channel.

Button Functions

Aspect

This feature will help you adjust the picture you are watching to give you the best possible picture quality.

Aspect Ratios

PANORAMA - With this ratio a normal 4:3 aspect picture is stretched to fit the dimensions of the 16:9 aspect screen.

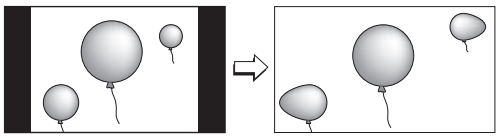

CINEMA - This ratio “zooms in” on the center part of a 4:3 aspect picture, blowing it up to fill the 16:9 screen.

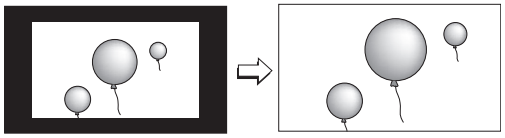

FULL - This is the ratio to use when watching 16:9 High-Definition broadcasts.

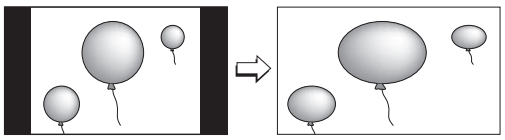

PANORAMA ZOOM - This ratio stretches the High-Definition 16:9 aspect image to eliminate the black side bars.

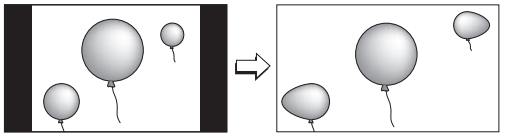

CINEMA ZOOM - This ratio stretches the High-Definition 16:9 aspect image to eliminate the black surrounding bars.

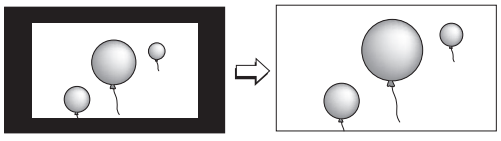

REGULAR - The regular ratio is used when you want to watch a 4:3 broadcast or recorded program without modifying the original picture to fit the dimensions of your 16:9 screen. The 4:3 picture will fill the screen from top to bottom, while black bars will appear to fill up the remaining space along the picture’s sides. The 4:3 picture will be centered within the boundaries of the 16:9 screen.

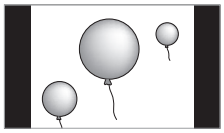

SLIM - This aspect mode shrinks the screen of 16:9 to 4:3. There are some programming that is already stretched by mistake at broadcasting companies, so this mode corrects it. Black side bars will appear.

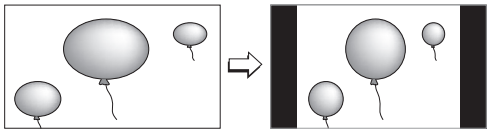

Aspect Ratios in PC Mode

REGULAR - This is the original aspect mode.

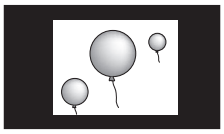

FULL - This aspect mode stretches the image to fit the dimensions of the 16:9 aspect screen.

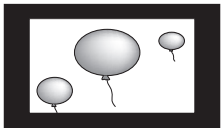

Button Functions

Aspect Ratios (Continued)

Press the ASPECT button

- *By pressing the ASPECT button, you can change the size.*

When you change the aspect ratios, it is different from their broadcast or recorded program.

SD (480i, 480p)
NTSC, 480i, 480p

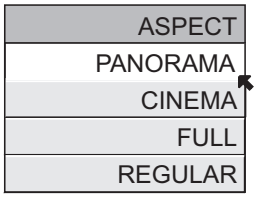

HD (1080i, 720p)
ATSC (1080i, 720p)

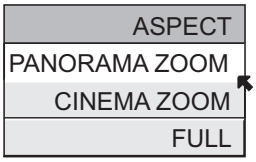

ATSC (480i, 480p)

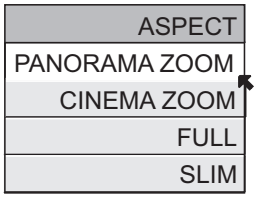

PC

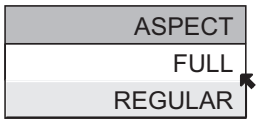

Notes:

- You can also choose the size by pressing the ▲▼ buttons.
- When you change the aspect ratio or signal, reset the picture position to center.
- You can also access the FRONT PANEL CONTROL screen by using the MENU button on the side of the TV instead of the remote control. It appears between INITIAL SETUP and PICTURE ADJUST screen, and it has VIDEO STATUS and ASPECT menus. Choose ASPECT by pressing Menu ▼ on the side panel and choose a mode by using the CHANNEL +/- buttons (◀ OPERATE ▶).
- "SLIM" can only be dispalyed when the signal is ATSC (480i or 480p).
- If the televison receives a 16:9 signal from your HDMI device, the aspect mode will turn to FULL automatically. If the television receives a 4:3 signal from your HDMI device when you are in FULL aspect mode, it will return to REGULAR aspect mode. If you change the aspect mode after the televison changed it to FULL automatically, the televison will change to the aspect mode you choosed.

Button Functions

TV/CATV Slide Switch

Use either the television's own tuner or a cable box to select channels. Set this switch to **TV** to operate the television's built-in tuner. Move the switch to **CATV** to operate a cable box.

Note:

- See page 27 for information on programming your remote for cable box operation.

VCR/DVD Slide Switch

You can control a VCR or DVD player with the buttons on the lower part of the remote control. Move the slide switch to **VCR** or **DVD** to operate.

Notes:

- The remote is preset with the code 000 to control JVC-brand VCR's. For any other manufacturer's brand VCR, please see the code chart and instructions on page 28.
- The remote is preset with the code 000 to control JVC-brand DVD players. For any other manufacturer's brand DVD player, please see the code chart and instructions on page 29.

VCR Buttons

You can use this remote control to operate the basic functions of your VCR. These functions include: play, record, rewind, fast-forward, stop, pause, channel scan, TV/VCR, power on and power off.

Move the selector switch to **VCR** to operate.

- The remote is preset with the code 000 to control JVC-brand VCR's. For any other manufacturer's brand VCR, please see the code chart and instructions on page 28.

DVD Buttons

You can also use this remote control to operate the basic functions of your DVD player. These functions include: play, rewind, fast-forward, stop, still/pause, previous/next, tray open/close, power on and power off.

Move the selector switch to **DVD** to operate.

- The remote is preset with the code 000 to control JVC-brand DVD players. For any other manufacturer's brand DVD player, please see the code chart and instructions on page 29.

Light

Your remote control includes illuminated buttons for key features like CHANNEL +/- and VOLUME +/-. Press the LIGHT button to turn the illumination on for 5 seconds.

Button Functions

D/A (Digital/Analog)

The D/A button changes the analog and digital channel. Each time you press the D/A button, you can switch back and forth the analog and digital channels. Digital channels have a "D" in front of the channel number.

Press the D/A button

To watch digital channels

For example, to move to channel D23:

Press 2 (Two)

Press 3 (Three)

Press the TUNE button

Sub Channel

The main channel sometimes has minor channels (Sub Channels). By using the SUB CHANNEL button, you can select a sub channel easily.

For example, to move to sub channel 123-45:

Press 1, 2 and 3 in order

Press the SUB CHANNEL button

Press 4 and 5 in order

Press the TUNE button

Note:

- If there are more than 2 major channels, select the digital channel by using the ▲▼ buttons and then press the OK button.

Guide

You can view the program from the GUIDE.

Notes:

- The GUIDE function will only work when you are receiving digital programming only.
- The GUIDE will not show the correct time and date if you have not performed the set clock function on your television. See page 60.

OSD Information

Weak Signal

This OSD warning appears when the digital channel that you have selected is too weak to receive or no signal is being detected for that channel.

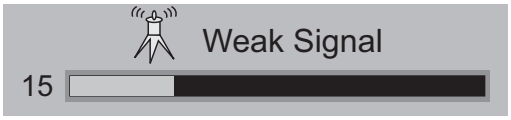

No Program

If the TV channel you selected, or were watching is not receiving a signal, "NO PROGRAM" appears on the television screen. It appears when that channel is not receiving a signal and you have the Noise Muting function OFF and you have a single screen. It moves automatically every two seconds to prevent the screen from burn-in.

Note:

- Even if "NO PROGRAM" appears on the screen, your timer functions and auto shut off functions that you set, are still active.

Invalid Signal

If you are inputting a PC signal that is invalid, "Invalid Signal" will appear on the TV screen. It appears when the input is PC and it is a single screen.

Troubleshooting

Refer to the table below to check the condition. If you think that there is a problem, contact the JVC Service Center where you purchased the television.

PROBLEMS	CHECK
There is no power	• See if the power cord became unplugged. • Check for a blown fuse or circuit breaker or a power outage.
There is no picture or sound	• The antenna could be disconnected. • The input mode could be set improperly. See page 64. • The tuner (Auto Tuner Setup) could be set improperly. See page 34. • The TV station may be having difficulties. Check to see if other stations are working. • Use the HDMI cable with HDMI logo HDMI. See page 20. • You can not output audio using the AUDIO OUTPUT under the following conditions: 1) When you have digital sound from an HDMI device connected to the HDMI 1 or HDMI 2 connection on the back of your TV. (See page 20). 2) When you have analog sound from a DVI device connected to the AUDIO IN "FOR HDMI 1" connection. (See page 19). • When you have an HDMI device connected to the HDMI 1 connection on the back of your TV, your TV detects it, and blocks the analog audio signal coming into the "FOR HDMI 1" jacks. Therefore, you can not hear any analog sound from the other device conected to the "FOR HDMI 1" jacks, while you are viewing the images from the HDMI device. (See page 20).
Remote control is not operating properly or at all	• Check to see that the batteries are still working and properly installed. • Make sure the remote has a clear sight path to the TV. • Check that the TV/CATV switch is in the proper position. • You may be too far from the TV. You must be within 23 feet (7 meters).
You cannot select a certain channel	• Make sure the channels have been programmed. See "Channel Summary", page 35. • Check to see if the channel is locked. See "Channel Summary - Lock" page 36.
The power turns off by itself	• Make sure the set did not become unplugged. • Perhaps the On/Off Timer is set. See page 61. • Check to see if the Sleep Timer was set. See page 67.
It does not operate correctly	• This television is operated by a microprocessor. It is possible that external noise or interference is causing the problem. If the television does not function correctly, remove the electrical plug from the wall outlet and wait a while before inserting it into the wall outlet again and operating the television.
The clock is wrong	• The power was interrupted and the clock was not reset. See page 60.
The color quality is poor	• Tint and Color may be improperly adjusted. See page 55. • The Video Status mode may be turned to the wrong setting. See page 66.
There are lines across the picture	• There could be interference from another electrical appliance, such as a computer, another TV or VCR. Move any such appliances further away from the TV.
The picture is spotted	• There could be interference from a high-wattage appliance, like a hairdryer or vacuum, operating nearby. Move the antenna away from the appliance or change to a coaxial cable connection which is less prone to interference.
There are double pictures (ghosts)	• A building or passing airplane can reflect the original signal and produce a second, slightly delayed one. Adjust your antenna position.
Picture is snowy (image noise)	• Your antenna may be damaged, disconnected or turned. Check the antenna connection. If the antenna is damaged, replace it.
Screen is 80% black	• The Closed Caption Text mode is on. Turn it off in the Closed Caption Menu, page 45.
Stereo or bilingual programs can't be heard	• Make sure the MTS settings are correct. See page 67.

Troubleshooting

PROBLEMS	CHECK
Static electricity	• It is normal to feel static electricity if you brush or touch the screen.
You hear occasional crackling sounds	• It is normal for the TV to make crackling sounds when first turned on or off. Unless the sound or picture become abnormal, this is fine.
It does not operate correctly	• Press the CHANNEL- and VOLUME- buttons on the side panel of the TV simultaneously for a few seconds. The Digital Tuner will be reset. If this does not reset it correctly, unplug the power cord and plug it back in.

The following are not malfunctions.

- The television may make a creaking sound if the temperature of the room or the temperature of the inside of the television changes. If there is no problem with the screen or sound, then there is no need to worry.
- Although the picture may be temporarily disturbed and noise may be seen on the screen if the power is turned on immediately after it has been turned off, this is not a malfunction.

Specifications

Model	LT-32X887 LT-32X787 LT-32X667	LT-37X887 LT-37X787 LT-37XM57	LT-40X887 LT-40X787 LT-40X667
Type	LCD Flat Television		
Reception Format	NTSC, BTSC System (Multi-Channel Sound) ATSC Terrestrial, Digital Cable		
Reception Range	VHF 2 to 13, UHF 14 to 69 at ATSC, CATV 135 Sub, Mid, Super, Hyper and Ultra bands at Digital Cable		
	VHF 2 to 13, UHF 14 to 69 CATV 125 Sub, Mid, Super, Hyper and Ultra bands (191 channel frequency synthesizer system) at Analog • Reception of channel A-5 ("95" of the TV set's on-screen cable channel numbers) is not recommended for your TV set.		
Power Source	AC 120V, 60 Hz		
Power Consumption	160W	178W	257W
Screen Size	32 inch / 80.0 cm measured diagonally, 16:9 ratio	37 inch / 94.0 cm measured diagonally, 16:9 ratio	40 inch / 101.5 cm measured diagonally, 16:9 ratio
Audio Output	10W + 10W		
Speakers	5.5cm x 15cm oblique x 2	4cm x 16cm twin oblique x 2	6.6cm oblique x 2, 6.6cm woofer x 2
Antenna Terminal (VHF/UHF, ATSC/DIGITAL CABLE IN)	75 ohms (VHF/UHF)(F-type connector)		
External Input Jacks	Video: 1 Vp-p, 75 ohms Audio: 500 mVrms (-4dBvfs) high impedance		
Component Input Jack	Y: 1Vp-p positive, 75 ohms (negative sync provided) Pb/Pr: 0.7 Vp-p 75 ohms		
S-Video Input Jacks	Y: 1Vp-p positive, 75 ohms (negative sync provided) C: 0.286 Vp-p (burst signal), 75 ohms		
Audio Output Jacks (FIX)	FIX : 250mVrms (-10dBvfs), Fs-18dB Low Impedance		
Optical Output Digital Audio	Digital Out (optical) x 1		
PC Input Jack	Analog RGB D-SUB (15 pin) x 1 • PC signal is available. Refer to page 23 for details on the signals which can be input.		
Digital–In	HDMI jack x 2 Note: The Digital–In terminal is not compatible with picture signals of a personal computer		
Dimensions (inch/cm) W X H X D	31 1/2 x 23 1/4 x 10 5/8 (with stand) 80 x 58.9 x 26.8 (with stand)	36 1/4 x 25 5/8 x 12 1/4 (with stand) 91.9 x 65 x 31.1 (with stand)	39 3/8 x 29 x 12 3/4 (with stand) 100 x 73.4 x 32.5 (with stand)
	31 1/2 x 21 1/2 x 5 1/2 (without stand) 80 x 54.5 x 13.8 (without stand)	36 1/4 x 23 3/4 x 5 1/8 (without stand) 91.9 x 60.4 x 12.8 (without stand)	39 3/8 x 26 1/2 x 4 5/8 (without stand) 100 x 67.1 x 11.8 (without stand)
Weight (lbs / kg)	38.3 / 17.4 (with stand)	51.3 / 23.3 (with stand)	68.2 / 31 (with stand)
	35 / 15.9 (without stand)	44.7 / 20.3 (without stand)	55 / 25 (without stand)
Accessories	Refer to "unpacking your TV", page 8		

Specifications subject to change without notice.

- The open source software is embedded in this product. For more information, please go to: http://software.jvc.com/opensource/lnx/DP/05_AtscQam/download.html

JVC®

LIMITED WARRANTY

COLOR TV 1-1

For Canadian model televisions, see separate sheets for Canadian Warranty information.

JVC COMPANY OF AMERICA (JVC) warrants this product and all parts thereof, except as set forth below ONLY TO THE ORIGINAL RETAIL PURCHASER to be FREE FROM DEFECTIVE MATERIALS AND WORKMANSHIP from the date of original purchase for the period shown below. ("The Warranty Period")
FOR DIRECT-VIEW COLOR TELEVISION, PICTURE TUBE is covered for Two(2)years.

Parts	Labor
1 YEAR	**1 YEAR**

THIS LIMITED WARRANTY IS VALID ONLY IN THE FIFTY (50) UNITED STATES, THE DISTRICT OF COLUMBIA AND IN THE COMMONWEALTH OF PUERTO RICO.

WHAT WE WILL DO:

If this product is found to be defective within the warranty period, JVC will repair or replace defective parts with new or rebuilt equivalents at no charge to the original owner. Such repair and replacement services shall be rendered by JVC during normal business hours at JVC authorized service centers. Parts used for replacement are warranted only for the remainder of the Warranty Period. All products may be brought to a JVC authorized service center on a carry-in basis. Color televisions with a screen size of 27" or greater qualify for in-home service. In such cases, a technician will come to your home and either repair the TV there or remove and return it if it cannot be repaired in your home.

WHAT YOU MUST DO FOR WARRANTY SERVICE:

Please do not return your product to the retailer

Instead, return your product to the JVC authorized service center nearest you. If shipping the product to the service center, please be sure to package it carefully, preferably in the original packaging, and include a brief description of the problem(s). Please call 1-800-252-5722 to locate the nearest JVC authorized service center. Service locations can also be obtained from our website http://www.jvc.com. If your product qualifies for in-home service, the service representative will require clear access to the product.

If you have any questions concerning your JVC Product, please contact our Customer Care Center at 800-252-5722

WHAT IS NOT COVERED:

This limited warranty provided by JVC does not cover:

1. Products which have been subject to abuse, accident, alteration, modification, tampering, negligence, misuse, faulty installation, lack of reasonable care, or if repaired or serviced by anyone other than a service facility authorized by JVC to render such service, or if affixed to any attachment not provided with the products, or if the model or serial number has been altered, tampered with, defaced or removed;
2. Initial installation, installation and removal from cabinets or mounting systems.
3. Operational adjustments covered in the Owner's Manual, normal maintenance, video and audio head cleaning;
4. Damage that occurs in shipment, due to act of God, and cosmetic damage;
5. Signal reception problems and failures due to line power surge;
6. Video Pick-up Tubes/CCD Image Sensors are covered for 90 days from the date of purchase;
7. Accessories;
8. Batteries (except that Rechargeable Batteries are covered for 90 days from the date of purchase);
9. Products used for commercial purposes, including, but not limited to rental.

There are no express warranties except as listed above.

THE DURATION OF ANY IMPLIED WARRANTIES, INCLUDING THE IMPLIED WARRANTY OF MERCHANTABILITY, IS LIMITED TO THE DURATION OF THE EXPRESS WARRANTY HEREIN.

JVC SHALL NOT BE LIABLE FOR ANY LOSS OF USE OF THE PRODUCT, INCONVIENCE, OR ANY OTHER DAMAGES, WHETHER DIRECT, INCIDENTAL OR CONSEQUENTAL (INCLUDING, WITHOUT LIMITATION, DAMAGE TO TAPES, RECORDS OR DISCS) RESULTING FROM THE USE OF THIS PRODUCT, OR ARISING OUT OF ANY BREACH OF THIS WARRANTY. ALL EXPRESS AND IMPLIED WARRANTIES, INCLUDING THE WARRANTIES OF MERCHANTABILITY AND FITNESS FOR PARTICULAR PURPOSE, ARE LIMITED TO THE WARRANTY PERIOD SET FORTH ABOVE.

Some states do not allow the exclusion of incidental or consequential damages or limitations on how long an implied warranty lasts, so these limitations or exclusions may not apply to you. This warranty gives you specific legal rights and you may also have other rights which vary from state to state.

JVC COMPANY OF AMERICA
DIVISION OF JVC AMERICAS CORP.
1700 Valley Road
Wayne, NJ 07470
http://www.jvc.com

REFURBISHED PRODUCTS CARRY A SEPARATE WARRANTY, THIS WARRANTY DOES NOT APPLY. FOR DETAIL OF REFURBISHED PRODUCT WARRANTY, PLEASE REFER TO THE REFURBISHED PRODUCT WARRANTY INFORMATION PACKAGED WITH EACH REFURBISHED PRODUCT.

For customer use:

Enter below the Model No. and Serial No. which is located either on the rear, bottom or side of the cabinet. Retain this information for future reference.

Model No. : _____ Serial No. : _____

Purchase date : _____ Name of dealer : _____

TO OUR VALUED CUSTOMER

THANK YOU FOR PURCHASING THIS JVC PRODUCT.

WE WANT TO HELP YOU ACHIEVE A PERFECT EXPERIENCE.

NEED HELP ON HOW TO HOOK UP?
NEED ASSISTANCE ON HOW TO OPERATE?
NEED TO LOCATE A JVC SERVICE CENTER?
LIKE TO PURCHASE ACCESSORIES?

JVC® IS HERE TO HELP!

TOLL FREE: 1(800)252-5722

http://www.jvc.com

Remember to retain your Bill of Sale for Warranty Service.

Do not attempt to service the product yourself

Caution

To prevent electrical shock, do not open the cabinet.
There are no user serviceable parts inside.
Please refer to qualified service personnel for repairs.

BT-51011-8
(0504)

JVC COMPANY OF AMERICA
Division of JVC Americas Corp.
1700 Valley Road
Wayne, New Jersey, 07470

JVC CANADA, INC.
21 Finchdene Square
Scarborough, Ontario
Canada, M1X 1A7

JVC

SCHEMATIC DIAGRAMS

LCD PANEL TELEVISION

LT-32X667/Z, LT-32X787/Z, LT-32X887/Z

CD-ROM No.SML200606

BASIC CHASSIS
FL4

[LT-32X787/Z]

COPYRIGHT © 2006 Victor Company of Japan, Limited.

No.YA428
2006/6

LT-32X667/Z, LT-32X787/Z, LT-32X887/Z

STANDARD CIRCUIT DIAGRAM

■ NOTE ON USING CIRCUIT DIAGRAMS

1.SAFETY

The components identified by the ⚠ symbol and shading are critical for safety. For continued safety replace safety ciritical components only with manufactures recommended parts.

2.SPECIFIED VOLTAGE AND WAVEFORM VALUES

The voltage and waveform values have been measured under the following conditions.

(1)Input signal	: Colour bar signal
(2)Setting positions of each knob/button and variable resistor	: Original setting position when shipped
(3)Internal resistance of tester	: DC 20kΩ/V
(4)Oscilloscope sweeping time	: H ⇒ 20μs / div
	: V ⇒ 5ms / div
	: Othters ⇒ Sweeping time is specified
(5)Voltage values	: All DC voltage values

∗ Since the voltage values of signal circuit vary to some extent according to adjustments, use them as reference values.

3.INDICATION OF PARTS SYMBOL [EXAMPLE]

● In the PW board : R1209 → R209

4.INDICATIONS ON THE CIRCUIT DIAGRAM

(1)Resistors

● Resistance value

No unit	: [Ω]
K	: [kΩ]
M	: [MΩ]

● Rated allowable power

No indication	: 1/16 [W]
Others	: As specified

● Type

No indication	: Carbon resistor
OMR	: Oxide metal film resistor
MFR	: Metal film resistor
MPR	: Metal plate resistor
UNFR	: Uninflammable resistor
FR	: Fusible resistor

∗ Composition resistor 1/2 [W] is specified as 1/2S or Comp.

(2)Capacitors

● Capacitance value

1 or higher	: [pF]
less than 1	: [μF]

● Withstand voltage

No indication	: DC50[V]
Others	: DC withstand voltage [V]
AC indicated	: AC withstand voltage [V]

∗ Electrolytic Capacitors

47/50[Example]: Capacitance value [μF]/withstand voltage[V]

● Type

No indication	: Ceramic capacitor
MM	: Metalized mylar capacitor
PP	: Polypropylene capacitor
MPP	: Metalized polypropylene capacitor
MF	: Metalized film capacitor
TF	: Thin film capacitor
BP	: Bipolar electrolytic capacitor
TAN	: Tantalum capacitor

(3)Coils

No unit	: [μH]
Others	: As specified

(4)Power Supply

∗ Respective voltage values are indicated

(5)Test point

(6)Connecting method

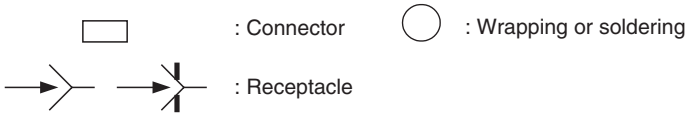

(7)Ground symbol

⊥ : LIVE side ground

⏚ : ISOLATED(NEUTRAL) side ground

⏚ : EARTH ground

▽ : DIGITAL ground

5.NOTE FOR REPAIRING SERVICE

This model's power circuit is partly different in the GND. The difference of the GND is shown by the LIVE : (⊥) side GND and the ISOLATED(NEUTRAL) : (⏚) side GND. Therefore, care must be taken for the following points.

(1)Do not touch the LIVE side GND or the LIVE side GND and the ISOLATED(NEUTRAL) side GND simultaneously. if the above caution is not respected, an electric shock may be caused. Therefore, make sure that the power cord is surely removed from the receptacle when, for example, the chassis is pulled out.

(2)Do not short between the LIVE side GND and ISOLATED(NEUTRAL) side GND or never measure with a measuring apparatus measure with a measuring apparatus (oscilloscope, etc.) the LIVE side GND and ISOLATED(NEUTRAL) side GND at the same time. If the above precaution is not respected, a fuse or any parts will be broken.

◆ **Since the circuit diagram is a standard one, the circuit and circuit constants may be subject to change for improvement without any notice.**

NOTE

◆ **Due improvement in performance, some part numbers show in the circuit diagram may not agree with those indicated in the part list.**
When ordering parts, please use the numbers that appear in the Parts List.

CONTENTS

SEMICONDUCTOR SHAPES 2-2
BLOCK DIAGRAM 2-3
WIRING DIAGRAM 2-5
CIRCUIT DIAGRAMS 2-7
ANALOG PWB CIRCUIT DIAGRAM 2-7
DIGITAL PWB CIRCUIT DIAGRAM 2-19
POWER PWB CIRCUIT DIAGRAM 2-51
LED PWB CIRCUIT DIAGRAM 2-53
SW PWB CIRCUIT DIAGRAM 2-55
D-AMP PWB CIRCUIT DIAGRAM 2-57
DC-DC PWB CIRCUIT DIAGRAM 2-59
SD CARD PWB CIRCUIT DIAGRAM 2-61
OPTICAL PWB CIRCUIT DIAGRAM 2-63
PATTERN DIAGRAMS 2-65
ANALOG PWB PATTERN 2-65
DIGITAL PWB PATTERN 2-67
POWER PWB PATTERN 2-71
DC-DC PWB PATTERN 2-73
LED PWB PATTERN 2-73
SW PWB PATTERN 2-74
D-AMP PWB PATTERN 2-74
SD CARD PWB PATTERN 2-75
OPTICAL PWB PATTERN 2-76

USING P.W. BOARD

PWB ASS'Y name	LT-32X667/Z	LT-32X787/Z	LT-32X887/Z
SD CARD P.W. BOARD	SFL-1305A-M2	←	←
ANALOG P.W. BOARD	SFL-1311A-M2	←	←
OPTICAL P.W. BOARD	SFL-2501A-M2	←	←
D-AMP P.W. BOARD	SFL-6301A-M2	←	←
SW P.W. BOARD	SFL-7207A-M2	←	←
LED P.W. BOARD	SFL-8901A-M2	←	←
POWER P.W. BOARD	SFL-9048A-M2	←	←
DC-DC P.W. BOARD	SFL-9154A-M2	←	←
DIGITAL P.W. BOARD	SFL0D178A-M2	SFL0D175A-M2	SFL0D173A-M2

SEMICONDUCTOR SHAPES

TRANSISTOR

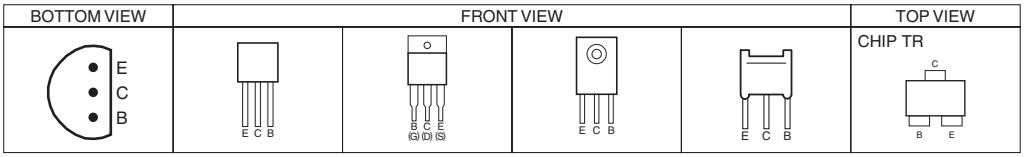

IC

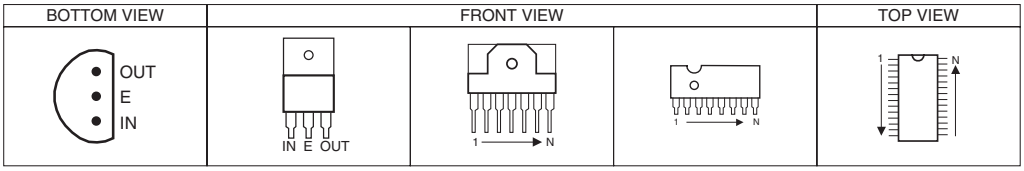

CHIP IC

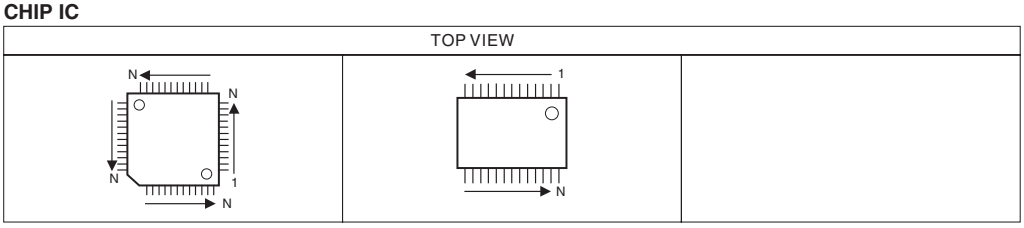

BLOCK DIAGRAM

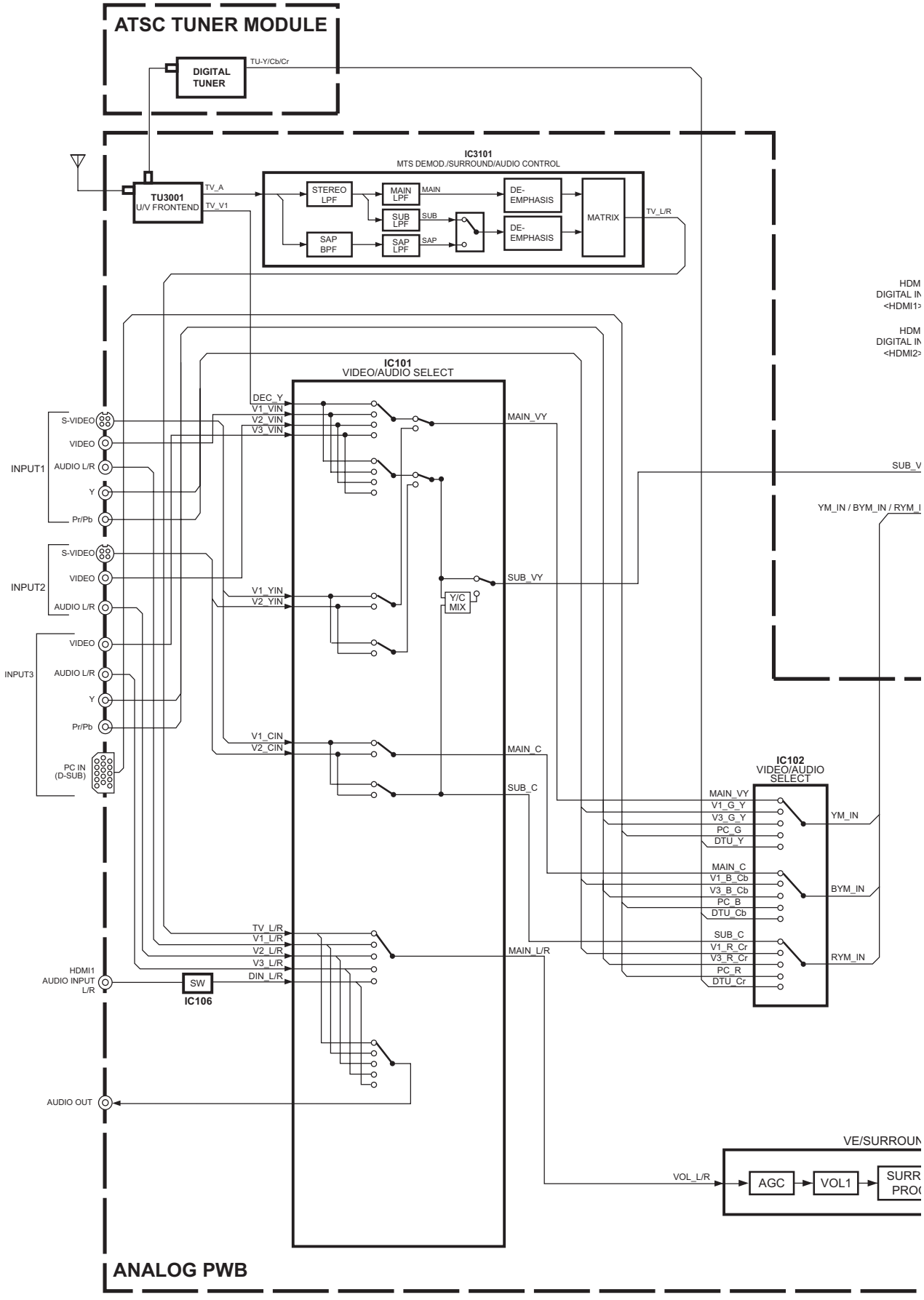

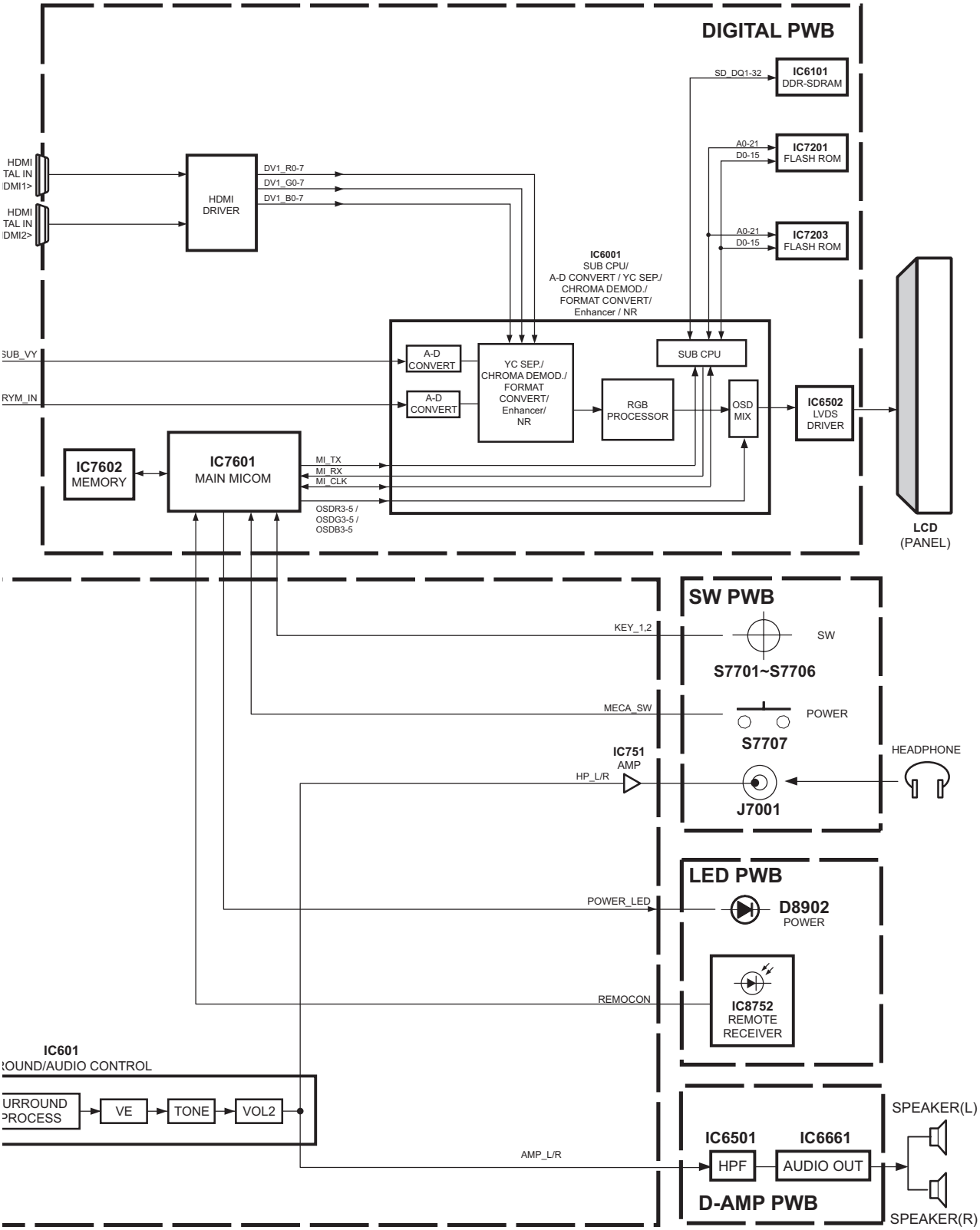
DIGITAL PWB
SD_DQ1-32
IC6101
DDR-SDRAM
A0-21
D0-15
IC7201
FLASH ROM
IC7203
FLASH ROM
HDMI
TAL IN
DMI1>
HDMI
TAL IN
DMI2>
HDMI
DRIVER
DV1_R0-7
DV1_G0-7
DV1_B0-7
IC6001
SUB CPU/
A-D CONVERT / YC SEP./
CHROMA DEMOD./
FORMAT CONVERT/
Enhancer / NR
SUB_VY
RYM_IN
A-D
CONVERT
A-D
CONVERT
YC SEP./
CHROMA DEMOD./
FORMAT
CONVERT/
Enhancer/
NR
SUB CPU
RGB
PROCESSOR
OSD
MIX
IC6502
LVDS
DRIVER
LCD
(PANEL)
IC7602
MEMORY
IC7601
MAIN MICOM
MI_TX
MI_RX
MI_CLK
OSDR3-5 /
OSDG3-5 /
OSDB3-5
SW PWB
KEY_1,2
SW
S7701~S7706
MECA_SW
POWER
S7707
IC751
AMP
HP_L/R
HEADPHONE
J7001
LED PWB
POWER_LED
D8902
POWER
REMOCON
IC8752
REMOTE
RECEIVER
IC601
ROUND/AUDIO CONTROL
URROUND
PROCESS
VE
TONE
VOL2
SPEAKER(L)
IC6501
IC6661
AMP_L/R
HPF
AUDIO OUT
D-AMP PWB
SPEAKER(R)

WIRING DIAGRAM

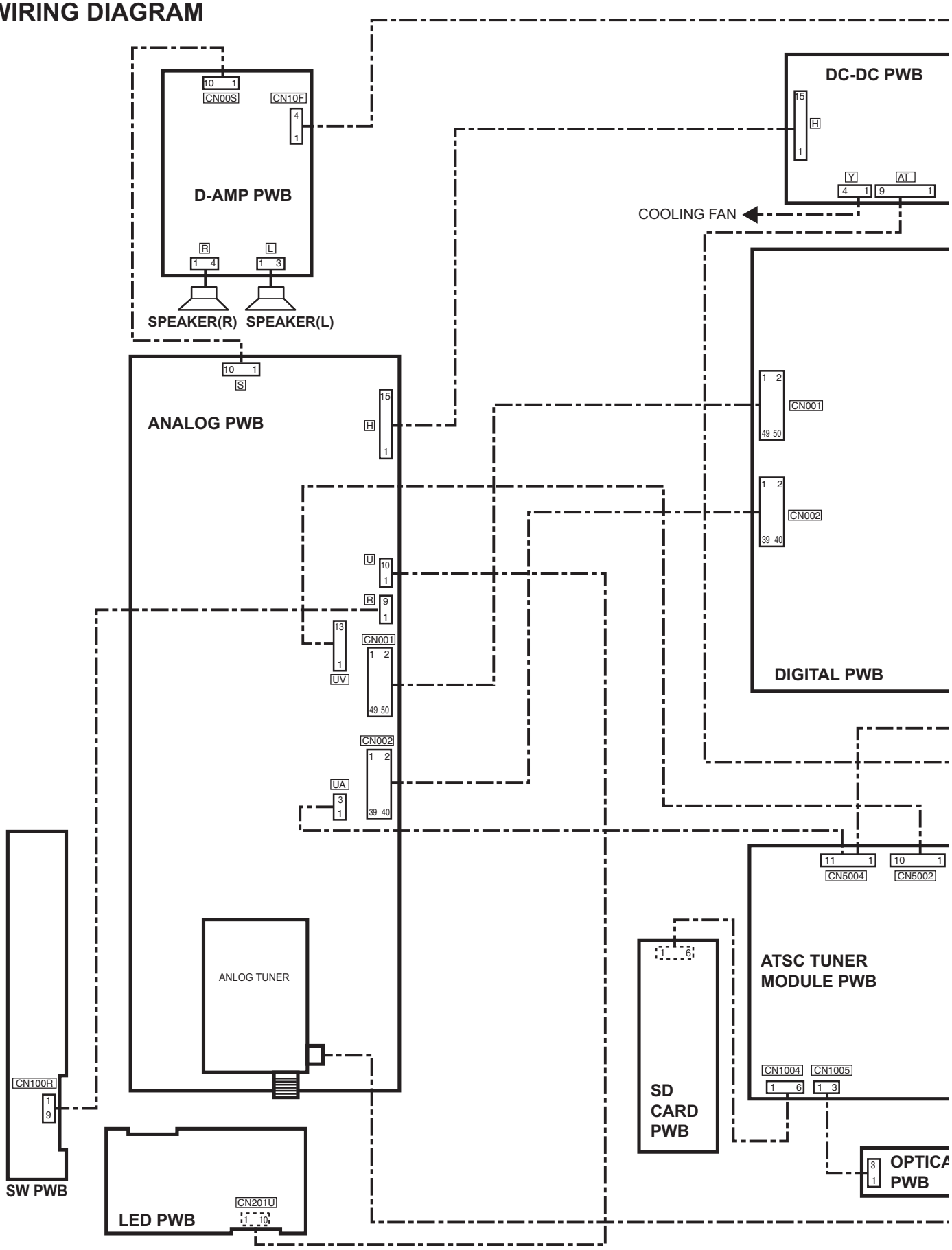

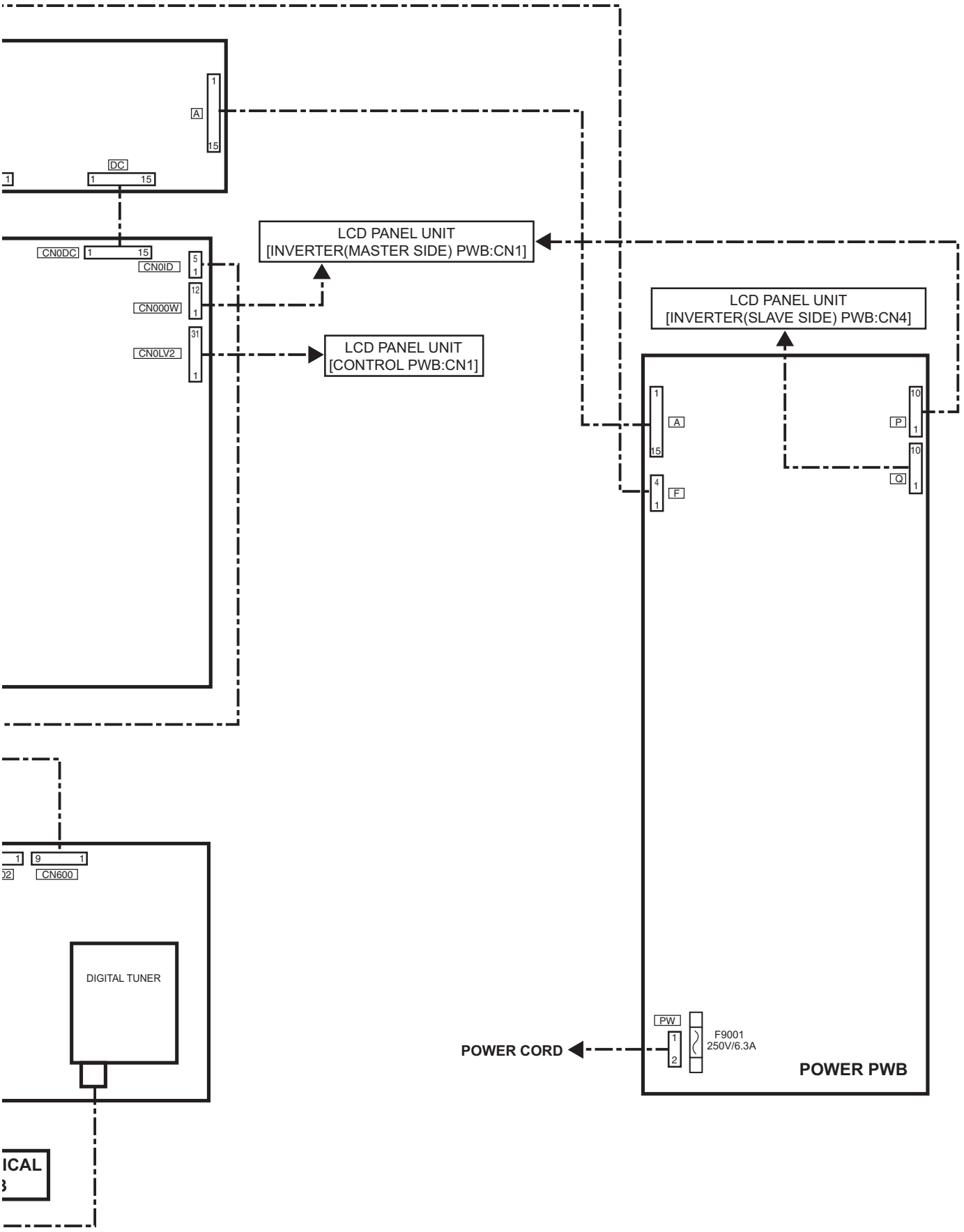
A
1
15
DC
1
15
CN0DC
1
15
CN0ID
5
1
CN000W
12
1
CN0LV2
31
1
LCD PANEL UNIT
[INVERTER(MASTER SIDE) PWB:CN1]
LCD PANEL UNIT
[CONTROL PWB:CN1]
LCD PANEL UNIT
[INVERTER(SLAVE SIDE) PWB:CN4]
A
P
Q
F
CN600
DIGITAL TUNER
PW
F9001
250V/6.3A
POWER CORD
POWER PWB

CIRCUIT DIAGRAMS

ANALOG PWB CIRCUIT DIAGRAM (1/6) SHEET 1

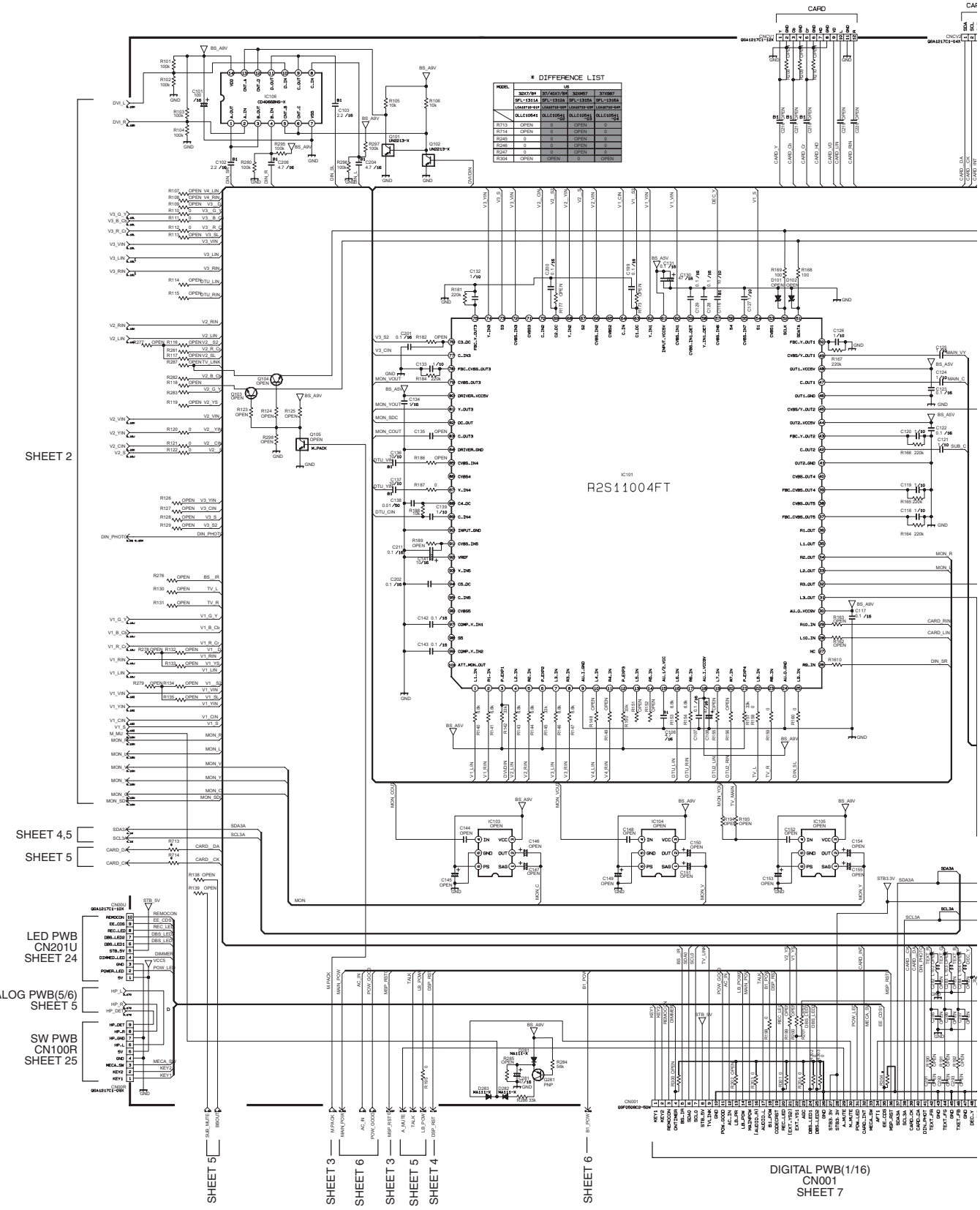

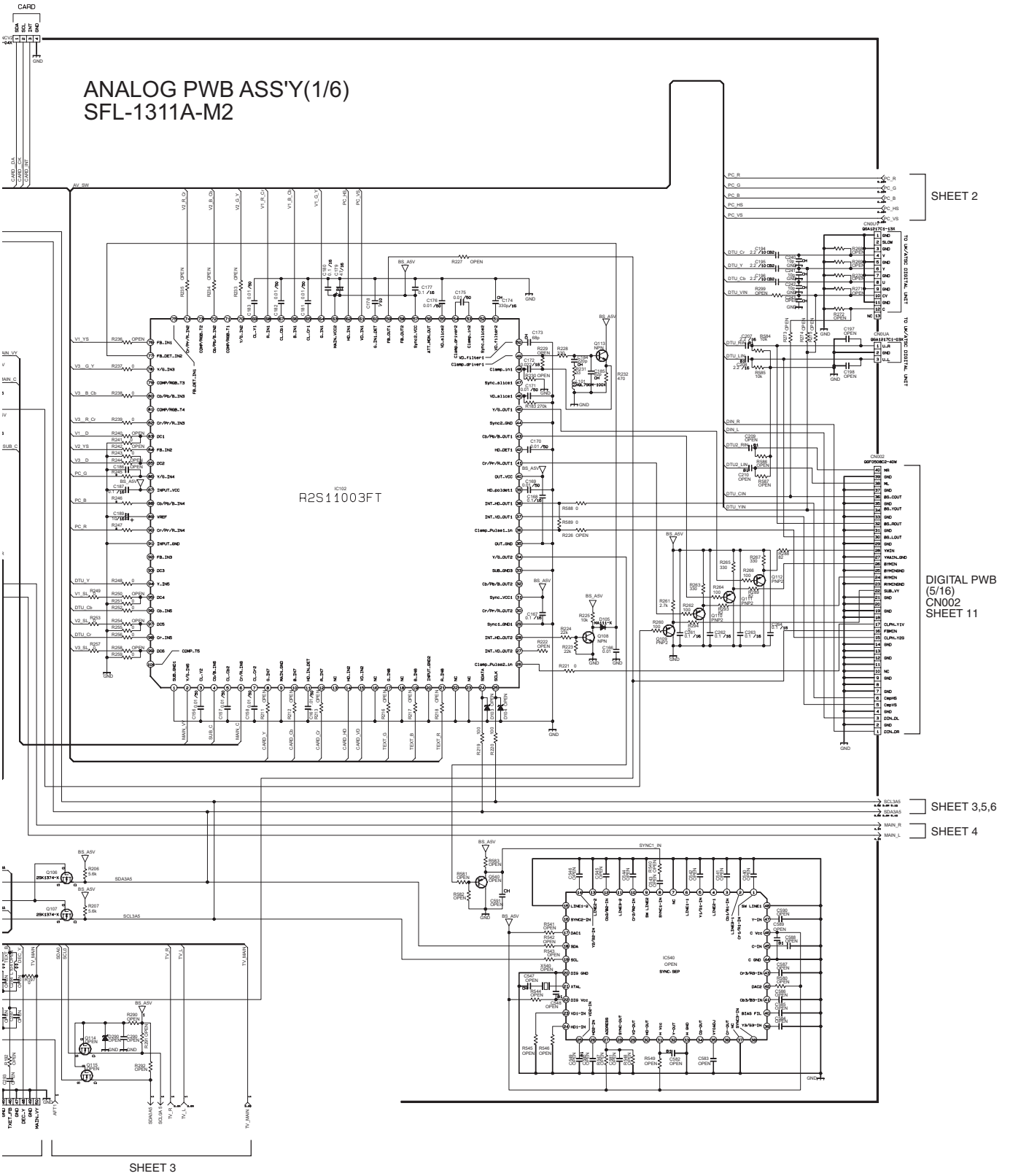

c10459001a001_0410_1/6_0.0

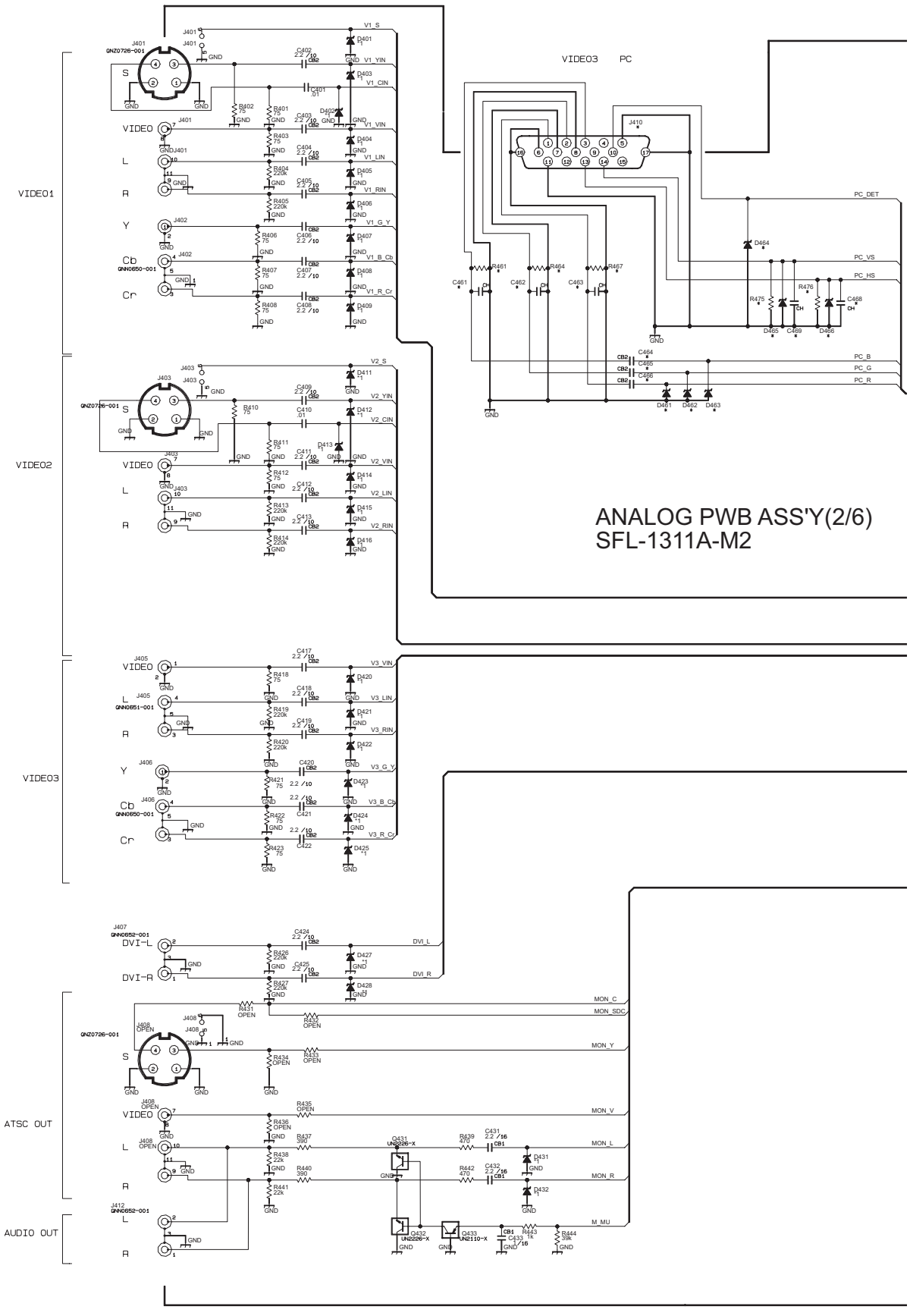
VIDEO1
VIDEO2
VIDEO3
ATSC OUT
AUDIO OUT
VIDEO03 PC
ANALOG PWB ASS'Y(2/6)
SFL-1311A-M2

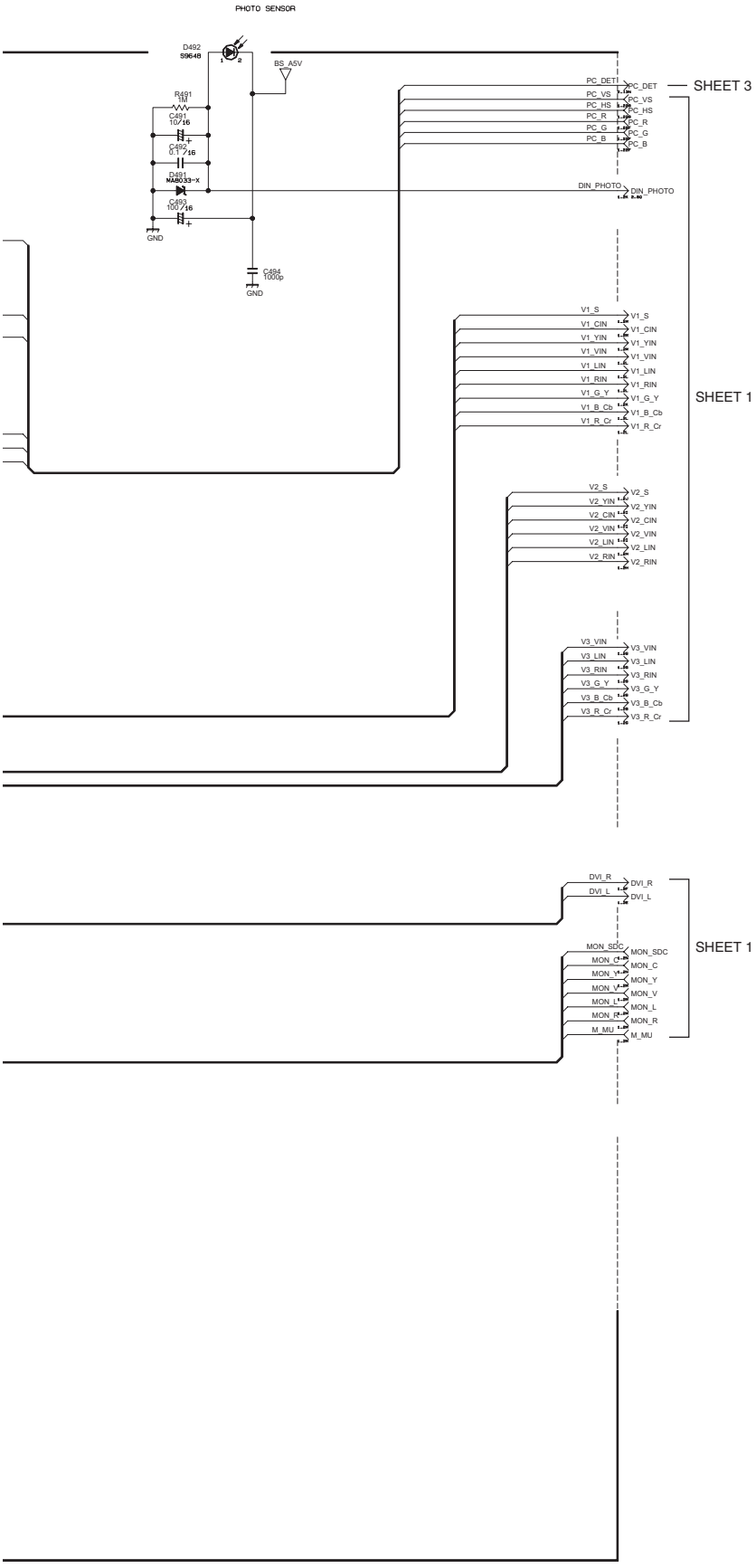

* DIFFERENCE LIST

MODEL	US			
	32X7/B#	37/40X7/B#	32XH57	37XB87
	SFL-1311A	SFL-1312A	SFL-1315A	SFL-1316A
	LCA10710-01#	LCA10710-02#	LCA10710-03#	LCA10710-04#
	QLLC10541	QLLC10541 -02	QLLC10541 -03	QLLC10541 -04
J410	2NZ0561-001	2NZ0561-001	OPEN	2NZ0561-001
R461	75	75	OPEN	75
R464	75	75	OPEN	75
R467	75	75	OPEN	75
R475	330	330	0	330
R476	330	330	0	330
C461	100p/50	100p/50	OPEN	100p/50
C462	100p/50	100p/50	OPEN	100p/50
C463	100p/50	100p/50	OPEN	100p/50
C464	2.2/10	2.2/10	OPEN	2.2/10
C465	2.2/10	2.2/10	OPEN	2.2/10
C466	2.2/10	2.2/10	OPEN	2.2/10
C468	100p/50	100p/50	OPEN	100p/50
C469	100p/50	100p/50	OPEN	100p/50
D461	*1	*1	OPEN	*1
D462	*1	*1	OPEN	*1
D463	*1	*1	OPEN	*1
D464	*1	*1	OPEN	*1
D465	*1	*1	OPEN	*1
D466	*1	*1	OPEN	*1

c10459001a006_0410_6/6_0.0

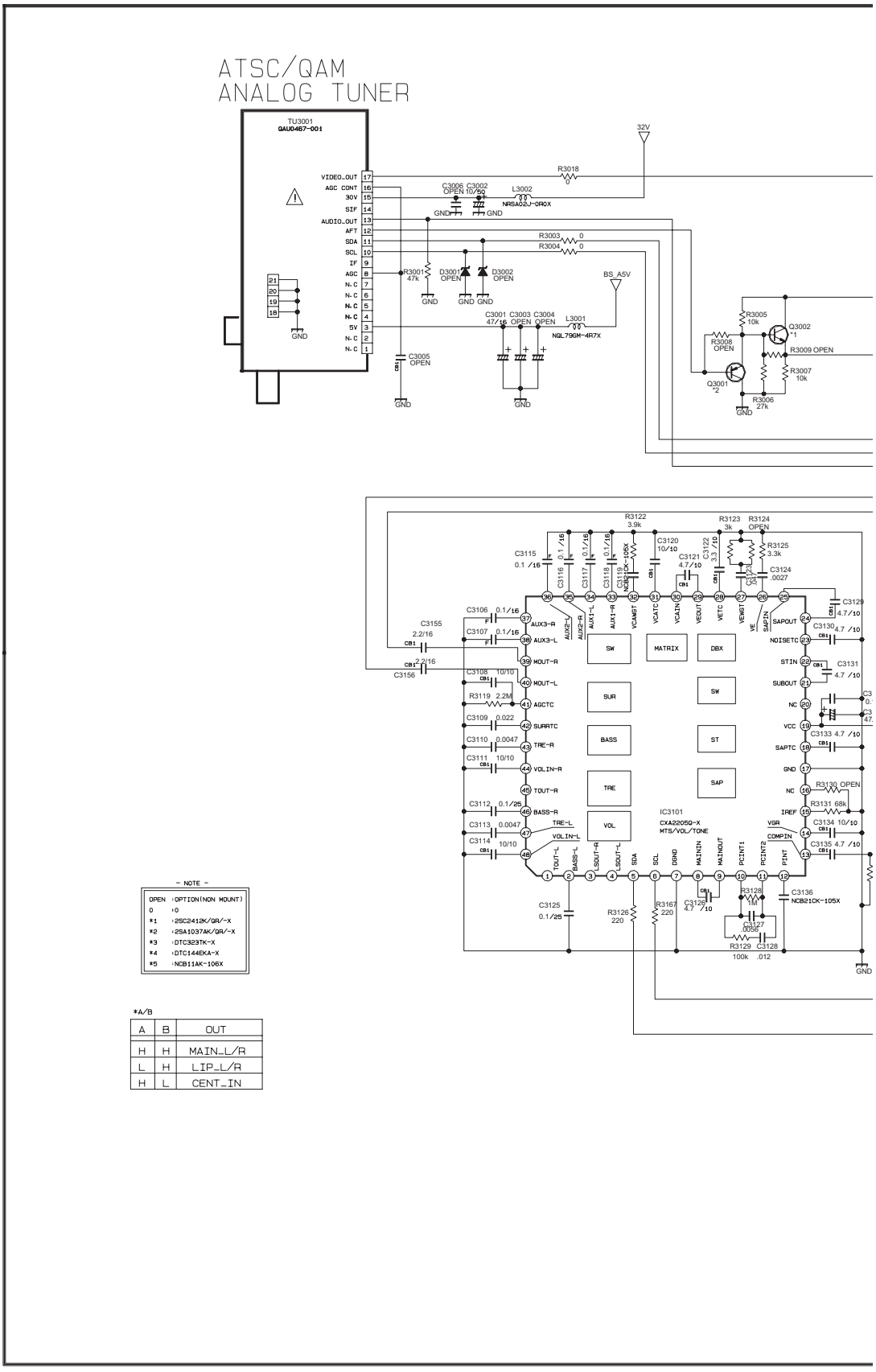
ATSC/QAM
ANALOG TUNER
TU3001
QAU0467-001
VIDEO_OUT
AGC CONT
3OV
SIF
AUDIO_OUT
AFT
SDA
SCL
IF
AGC
N.C
5V
32V
BS_A5V
R3018
L3002
NRSA02J-OROX
R3003
R3004
R3001 47k
D3001 OPEN
D3002 OPEN
L3001
NGL79GM-4R7X
C3005 OPEN
R3005 10k
Q3002 *1
R3008 OPEN
R3009 OPEN
R3007 10k
Q3001 *2
R3006 27k
IC3101
CXA2205Q-X
MTS/VOL/TONE
SW
MATRIX
DBX
SUR
BASS
TRE
VOL
ST
SAP
R3122 3.9k
R3123 3k
R3124 OPEN
R3125 3.3k
C3124 .0027
C3120 10/10
C3121 4.7/10
C3122 3.3/10
C3115 0.1/16
C3155 2.2/16
C3156 2.2/16
C3106 0.1/16
C3107 0.1/16
C3108 10/10
R3119 2.2M
C3109 0.022
C3110 0.0047
C3111 10/10
C3112 0.1/25
C3113 0.0047
C3114 10/10
C3125 0.1/25
R3126 220
R3167 220
C3126 4.7/10
R3128 1M
C3127 .0056
R3129 100k
C3128 .012
C3136 NCB21CK-105X
C3129 4.7/10
C3130 4.7/10
C3131 4.7/10
C3133 4.7/10
R3130 OPEN
R3131 68k
C3134 10/10
C3135 4.7/10
AUX3-R
AUX3-L
MOUT-R
MOUT-L
AGCTC
SUBRTC
TRE-R
VOLIN-R
TOUT-R
BASS-R
TRE-L
VOLIN-L
AUX2-L
AUX2-R
AUX1-L
AUX1-R
VCAMGT
VCATC
VCAIN
VEOUT
VETC
VEMGT
VE
SAPIN
SAPOUT
NOISETC
STIN
SUBOUT
NC
VCC
SAPTC
GND
NC
IREF
VGA
COMPIN
TOUT-L
BASS-L
LSOUT-R
LSOUT-L
SDA
SCL
DGND
MAININ
MAINOUT
PCINT1
PCINT2
PINT
- NOTE -
OPEN :OPTION(NON MOUNT)
0 :0
*1 :2SC2412K/QR/-X
*2 :2SA1037AK/QR/-X
*3 :DTC323TK-X
*4 :DTC144EKA-X
*5 :NCB11AK-106X
*A/B
A B OUT
H H MAIN_L/R
L H LIP_L/R
H L CENT_IN

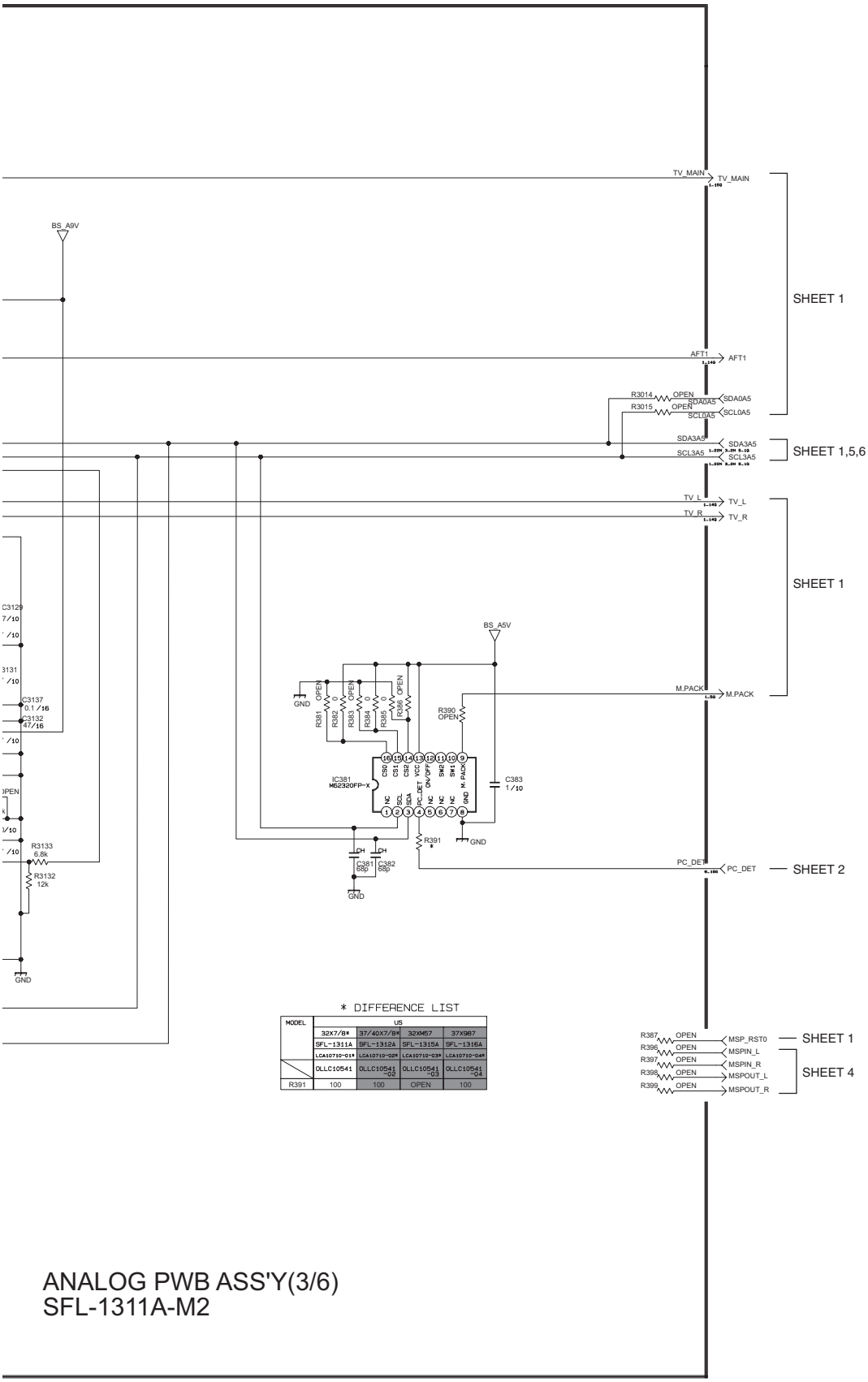

* DIFFERENCE LIST

MODEL	US			
	32X7/B*	37/40X7/B*	32XM57	37X9B7
	SFL-1311A	SFL-1312A	SFL-1315A	SFL-1316A
	LCA10710-01*	LCA10710-02*	LCA10710-03*	LCA10710-04*
	OLLC10541	OLLC10541 -06	OLLC10541 -03	OLLC10541 -24
R391	100	100	OPEN	100

ANALOG PWB ASS'Y(3/6)
SFL-1311A-M2

c10459001a002_0410_2/6_0.0

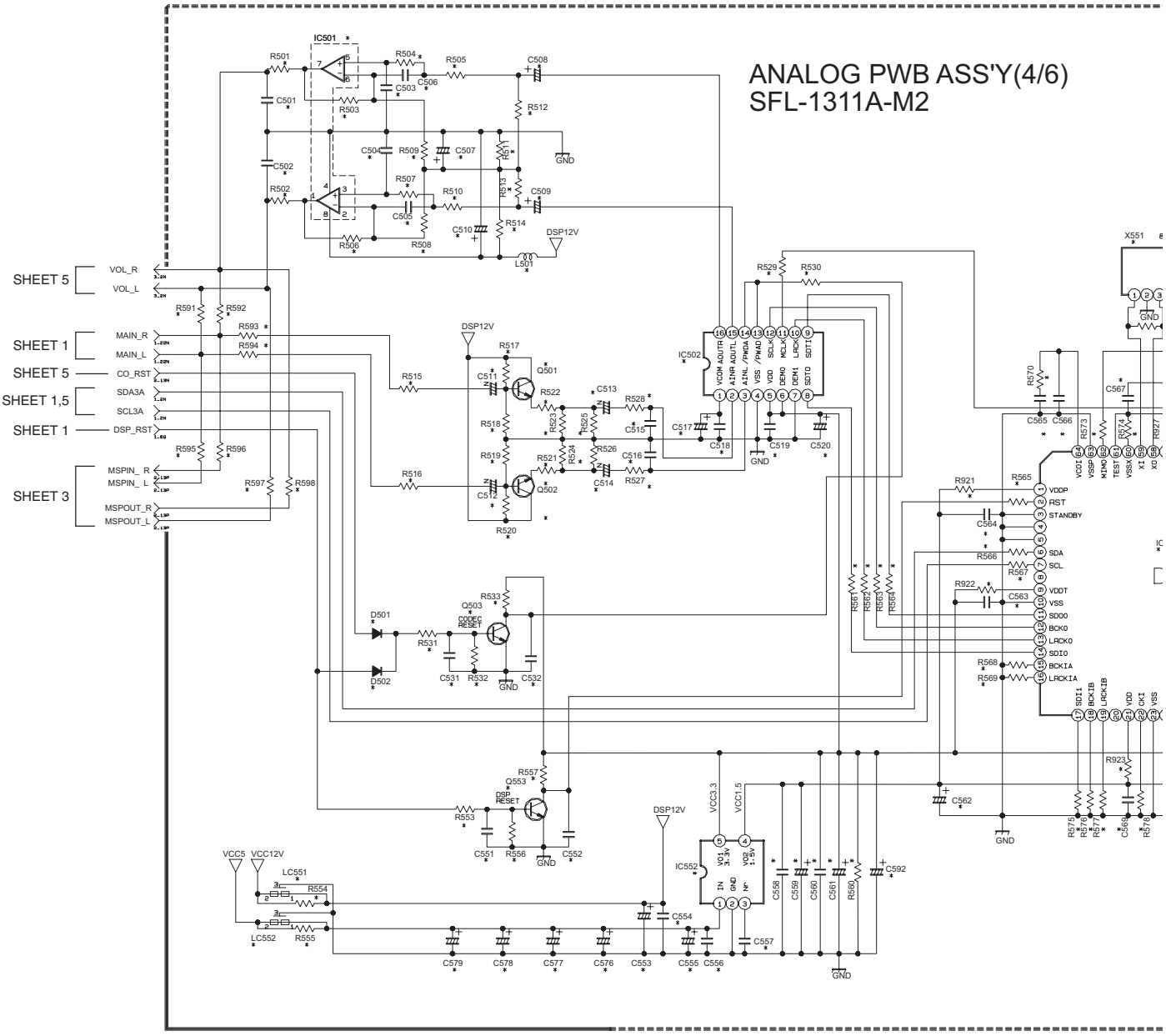
ANALOG PWB ASS'Y(4/6)
SFL-1311A-M2
SHEET 5
SHEET 1
SHEET 5
SHEET 1,5
SHEET 1
SHEET 3
VOL_R
VOL_L
MAIN_R
MAIN_L
CO_RST
SDA3A
SCL3A
DSP_RST
MSPIN_ R
MSPIN_ L
MSPOUT_R
MSPOUT_L
IC501
IC502
IC552
DSP12V
VCC3.3
VCC1.5
VCC5
VCC12V
GND
VDDP
RST
STANDBY
SDA
SCL
VDDT
VSS
SDOO
BCKO
LRCKO
SDIO
BCKIA
LRCKIA
SDI1
BCKIB
LRCKIB
VDD
CKI
VSS
CODEC RESET
DSP RESET

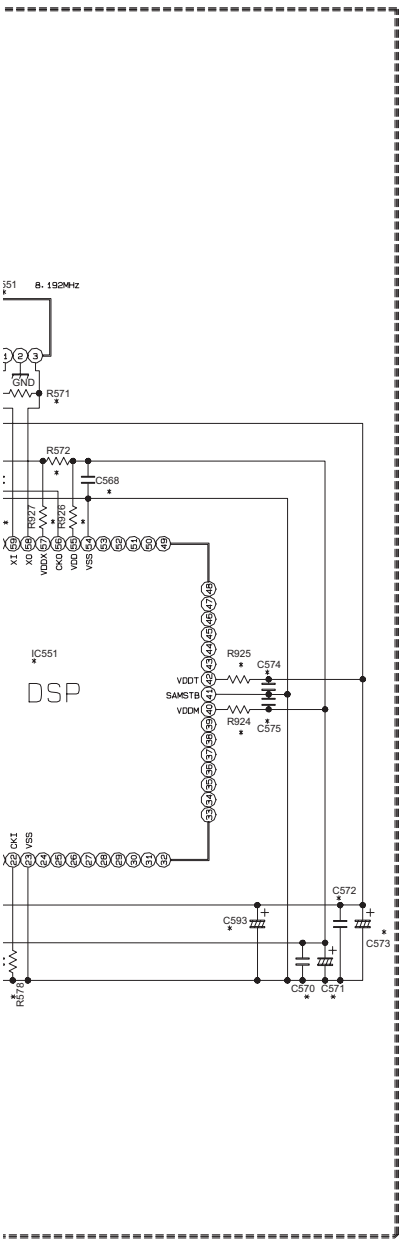

* DIFFERENCE LIST

MODEL	JPN	US					
		32X7/8*	37/40X7/8*	32XM57	37X987	40/46FH97	40/46FN97
	SFL-1321A	SFL-1311A	SFL-1312A	SFL-1315A	SFL-1316A	SFL-1313A	SFL-1314A
	LCA10712-01*	LCA10710-01*	LCA10710-02*	LCA10710-03*	LCA10710-04*	LCA10715-01*	LCA10715-02*
	OLLC10586	OLLC10541	OLLC10541-02	OLLC10541-03	OLLC10541-04	OLLC10761	OLLC10761-02
IC501	HA17558AF-X	OPEN	OPEN	OPEN	HA17558AF-X	HA17558AF-X	HA17558AF-X
IC502	AK4554VT-X	OPEN	OPEN	OPEN	AK4554VT-X	AK4554VT-X	AK4554VT-X
IC551	JCC5067	OPEN	OPEN	OPEN	JCC5067	JCC5067	JCC5067
IC552	PQ2L3152MG-X	OPEN	PQ2L3152MS-X	OPEN	PQ2L3152MS-X	PQ2L3152MS-X	PQ2L3152MS-X
X551	NAX0623-001X	OPEN	OPEN	OPEN	NAX0623-001X	NAX0623-001X	NAX0623-001X
L501	NRSA02J-0R0X	OPEN	OPEN	OPEN	NRSA02J-0R0X	NRSA02J-0R0X	NRSA02J-0R0X
LC551	OPEN	OPEN	OPEN	OPEN	OPEN	OPEN	OPEN
LC552	OPEN	OPEN	OPEN	OPEN	OPEN	OPEN	OPEN
Q501	NPN	OPEN	OPEN	OPEN	NPN	NPN	NPN
Q502	NPN	OPEN	OPEN	OPEN	NPN	NPN	NPN
Q503	NPN	OPEN	OPEN	OPEN	NPN	NPN	NPN
Q553	NPN	OPEN	OPEN	OPEN	NPN	NPN	NPN
R501	220	OPEN	OPEN	OPEN	220	220	220
R502	220	OPEN	OPEN	OPEN	220	220	220
R503	4.7k	OPEN	OPEN	OPEN	4.7k	4.7k	4.7k
R504	3.3k	OPEN	OPEN	OPEN	3.3k	3.3k	3.3k
R505	3.3k	OPEN	OPEN	OPEN	3.3k	3.3k	3.3k
R506	4.7k	OPEN	OPEN	OPEN	4.7k	4.7k	4.7k
R507	3.3k	OPEN	OPEN	OPEN	3.3k	3.3k	3.3k
R508	1k	OPEN	OPEN	OPEN	1k	1k	1k
R509	1k	OPEN	OPEN	OPEN	1k	1k	1k
R510	3.3k	OPEN	OPEN	OPEN	3.3k	3.3k	3.3k
R511	10k	OPEN	OPEN	OPEN	10k	10k	10k
R512	33k	OPEN	OPEN	OPEN	33k	33k	33k
R513	33k	OPEN	OPEN	OPEN	33k	33k	33k
R514	10k	OPEN	OPEN	OPEN	10k	10k	10k
R515	0	OPEN	OPEN	OPEN	0	0	0
R516	0	OPEN	OPEN	OPEN	0	0	0
R517	33k	OPEN	OPEN	OPEN	33k	33k	33k
R518	33k	OPEN	OPEN	OPEN	33k	33k	33k
R519	33k	OPEN	OPEN	OPEN	33k	33k	33k
R520	33k	OPEN	OPEN	OPEN	33k	33k	33k
R521	3.3k	OPEN	OPEN	OPEN	3.3k	3.3k	3.3k
R522	3.3k	OPEN	OPEN	OPEN	3.3k	3.3k	3.3k
R523	1k	OPEN	OPEN	OPEN	1k	1k	1k
R524	1k	OPEN	OPEN	OPEN	1k	1k	1k
R525	1k	OPEN	OPEN	OPEN	1k	1k	1k
R526	1k	OPEN	OPEN	OPEN	1k	1k	1k
R527	470	OPEN	OPEN	OPEN	470	470	470
R528	470	OPEN	OPEN	OPEN	470	470	470
R529	100	OPEN	OPEN	OPEN	100	100	100
R530	0	OPEN	OPEN	OPEN	0	0	0
R531	10k	OPEN	OPEN	OPEN	10k	10k	10k
R532	10k	OPEN	OPEN	OPEN	10k	10k	10k
R533	10k	OPEN	OPEN	OPEN	10k	10k	10k
R553	10k	OPEN	OPEN	OPEN	10k	10k	10k
R554	0	OPEN	OPEN	OPEN	0	0	0
R555	0	OPEN	0	OPEN	0	0	0
R556	10k	OPEN	OPEN	OPEN	10k	10k	10k
R557	10k	OPEN	OPEN	OPEN	10k	10k	10k
R560	6.8k	OPEN	6.8k	OPEN	6.8k	6.8k	6.8k
R561	220	OPEN	OPEN	OPEN	220	220	220
R562	220	OPEN	OPEN	OPEN	220	220	220
R563	220	OPEN	OPEN	OPEN	220	220	220
R564	220	OPEN	OPEN	OPEN	220	220	220
R565	0	OPEN	OPEN	OPEN	0	0	0
R566	100	OPEN	OPEN	OPEN	100	100	100
R567	100	OPEN	OPEN	OPEN	100	100	100
R568	10k	OPEN	OPEN	OPEN	10k	10k	10k
R569	10k	OPEN	OPEN	OPEN	10k	10k	10k
R570	100	OPEN	OPEN	OPEN	100	100	100
R571	1M	OPEN	OPEN	OPEN	1M	1M	1M
R572	4.7	OPEN	OPEN	OPEN	4.7	4.7	4.7
R573	10k	OPEN	OPEN	OPEN	10k	10k	10k
R574	0	OPEN	OPEN	OPEN	0	0	0
R575	10k	OPEN	OPEN	OPEN	10k	10k	10k
R576	10k	OPEN	OPEN	OPEN	10k	10k	10k
R577	10k	OPEN	OPEN	OPEN	10k	10k	10k
R578	10k	OPEN	OPEN	OPEN	10k	10k	10k
R921	0	OPEN	OPEN	OPEN	0	0	0
R922	0	OPEN	OPEN	OPEN	0	0	0
R923	0	OPEN	OPEN	OPEN	0	0	0
R924	0	OPEN	OPEN	OPEN	0	0	0
R925	0	OPEN	OPEN	OPEN	0	0	0
R926	0	OPEN	OPEN	OPEN	0	0	0
R927	0	OPEN	OPEN	OPEN	0	0	0
D501	1SS355-X	OPEN	OPEN	OPEN	1SS355-X	1SS355-X	1SS355-X
D502	1SS355-X	OPEN	OPEN	OPEN	1SS355-X	1SS355-X	1SS355-X

* DIFFERENCE LIST

MODEL	JPN	US					
		32X7/8*	37/40X7/8*	32XM57	37X987	40/46FH97	40/46FN97
	SFL-1321A	SFL-1311A	SFL-1312A	SFL-1315A	SFL-1316A	SFL-1313A	SFL-1314A
	LCA10712-01*	LCA10710-01*	LCA10710-02*	LCA10710-03*	LCA10710-04*	LCA10715-01*	LCA10715-02*
	OLLC10586	OLLC10541	OLLC10541-02	OLLC10541-03	OLLC10541-04	OLLC10761	OLLC10761-02
R591	OPEN	0	0	0	OPEN	OPEN	OPEN
R592	OPEN	0	0	0	OPEN	OPEN	OPEN
R593	0	OPEN	OPEN	OPEN	0	0	0
R594	0	OPEN	OPEN	OPEN	0	0	0
R595	OPEN	OPEN	OPEN	OPEN	OPEN	OPEN	OPEN
R596	OPEN	OPEN	OPEN	OPEN	OPEN	OPEN	OPEN
R597	OPEN	OPEN	OPEN	OPEN	OPEN	OPEN	OPEN
R598	OPEN	OPEN	OPEN	OPEN	OPEN	OPEN	OPEN

* DIFFERENCE LIST

MODEL	JPN	US					
		32X7/8*	37/40X7/8*	32XM57	37X987	40/46FH97	40/46FN97
	SFL-1321A	SFL-1311A	SFL-1312A	SFL-1315A	SFL-1316A	SFL-1313A	SFL-1314A
	LCA10712-01*	LCA10710-01*	LCA10710-02*	LCA10710-03*	LCA10710-04*	LCA10715-01*	LCA10715-02*
	OLLC10586	OLLC10541	OLLC10541-02	OLLC10541-03	OLLC10541-04	OLLC10761	OLLC10761-02
C501	NCB31HK-223X	OPEN	OPEN	OPEN	NCB31HK-223X	NCB31HK-223X	NCB31HK-223X
C502	NCB31HK-223X	OPEN	OPEN	OPEN	NCB31HK-223X	NCB31HK-223X	NCB31HK-223X
C503	0.0022	OPEN	OPEN	OPEN	0.0022	0.0022	0.0022
C504	0.0022	OPEN	OPEN	OPEN	0.0022	0.0022	0.0022
C505	0.0082	OPEN	OPEN	OPEN	0.0082	0.0082	0.0082
C506	0.0082	OPEN	OPEN	OPEN	0.0082	0.0082	0.0082
C507	NEHL1AM-107X	OPEN	OPEN	OPEN	NEHL1AM-107X	NEHL1AM-107X	NEHL1AM-107X
C508	1/50	OPEN	OPEN	OPEN	1/50	1/50	1/50
C509	1/50	OPEN	OPEN	OPEN	1/50	1/50	1/50
C510	NEHL1CM-476X	OPEN	OPEN	OPEN	NEHL1CM-476X	NEHL1CM-476X	NEHL1CM-476X
C511	NEHA1CM-475X	OPEN	OPEN	OPEN	NEHA1CM-475X	NEHA1CM-475X	NEHA1CM-475X
C512	NEHA1CM-475X	OPEN	OPEN	OPEN	NEHA1CM-475X	NEHA1CM-475X	NEHA1CM-475X
C513	NEHA1CM-475X	OPEN	OPEN	OPEN	NEHA1CM-475X	NEHA1CM-475X	NEHA1CM-475X
C514	NEHA1CM-475X	OPEN	OPEN	OPEN	NEHA1CM-475X	NEHA1CM-475X	NEHA1CM-475X
C515	1000p	OPEN	OPEN	OPEN	1000p	1000p	1000p
C516	1000p	OPEN	OPEN	OPEN	1000p	1000p	1000p
C517	NEHL1EM-475X	OPEN	OPEN	OPEN	NEHL1EM-475X	NEHL1EM-475X	NEHL1EM-475X
C518	0.1	OPEN	OPEN	OPEN	0.1	0.1	0.1
C519	0.1	OPEN	OPEN	OPEN	0.1	0.1	0.1
C520	NEHL1CM-106X	OPEN	OPEN	OPEN	NEHL1CM-106X	NEHL1CM-106X	NEHL1CM-106X
C531	1000p	OPEN	OPEN	OPEN	1000p	1000p	1000p
C532	1000p	OPEN	OPEN	OPEN	1000p	1000p	1000p
C551	1000p	OPEN	OPEN	OPEN	1000p	1000p	1000p
C552	1000p	OPEN	OPEN	OPEN	1000p	1000p	1000p
C553	47/16	OPEN	OPEN	OPEN	47/16	47/16	47/16
C554	0.1	OPEN	OPEN	OPEN	0.1	0.1	0.1
C555	NEHL1AM-107X	OPEN	NEHL1AM-107X	OPEN	NEHL1AM-107X	NEHL1AM-107X	NEHL1AM-107X
C556	0.1	OPEN	0.1	OPEN	0.1	0.1	0.1
C557	0.1	OPEN	0.1	OPEN	0.1	0.1	0.1
C558	NCB30JK-225X	OPEN	NCB30JK-225X	OPEN	NCB30JK-225X	NCB30JK-225X	NCB30JK-225X
C559	NEHL0JM-226X	OPEN	NEHL0JM-226X	OPEN	NEHL0JM-226X	NEHL0JM-226X	NEHL0JM-226X
C560	NCB30JK-225X	OPEN	NCB30JK-225X	OPEN	NCB30JK-225X	NCB30JK-225X	NCB30JK-225X
C561	NEHL0JM-226X	OPEN	NEHL0JM-226X	OPEN	NEHL0JM-226X	NEHL0JM-226X	NEHL0JM-226X
C562	NEHL0JM-226X	OPEN	OPEN	OPEN	NEHL0JM-226X	NEHL0JM-226X	NEHL0JM-226X
C563	0.01	OPEN	OPEN	OPEN	0.01	0.01	0.01
C564	0.01	OPEN	OPEN	OPEN	0.01	0.01	0.01
C565	0.1	OPEN	OPEN	OPEN	0.1	0.1	0.1
C566	0.1	OPEN	OPEN	OPEN	0.1	0.1	0.1
C567	0.01	OPEN	OPEN	OPEN	0.01	0.01	0.01
C568	0.01	OPEN	OPEN	OPEN	0.01	0.01	0.01
C569	0.01	OPEN	OPEN	OPEN	0.01	0.01	0.01
C570	NRSA63J-222X	OPEN	OPEN	OPEN	NRSA63J-222X	NRSA63J-222X	NRSA63J-222X
C571	NEHL0JM-226X	OPEN	OPEN	OPEN	NEHL0JM-226X	NEHL0JM-226X	NEHL0JM-226X
C572	NCB31CK-105X	OPEN	OPEN	OPEN	NCB31CK-105X	NCB31CK-105X	NCB31CK-105X
C573	NEHL0JM-226X	OPEN	OPEN	OPEN	NEHL0JM-226X	NEHL0JM-226X	NEHL0JM-226X
C574	0.01	OPEN	OPEN	OPEN	0.01	0.01	0.01
C575	0.01	OPEN	OPEN	OPEN	0.01	0.01	0.01
C576	NEHL1AM-107X	OPEN	NEHL1AM-107X	OPEN	NEHL1AM-107X	NEHL1AM-107X	NEHL1AM-107X
C577	NEHL1AM-107X	OPEN	NEHL1AM-107X	OPEN	NEHL1AM-107X	NEHL1AM-107X	NEHL1AM-107X
C578	NEHL1AM-107X	OPEN	NEHL1AM-107X	OPEN	NEHL1AM-107X	NEHL1AM-107X	NEHL1AM-107X
C579	NEHL1AM-107X	OPEN	NEHL1AM-107X	OPEN	NEHL1AM-107X	NEHL1AM-107X	NEHL1AM-107X
C592	OPEN	OPEN	OPEN	OPEN	OPEN	OPEN	OPEN
C593	OPEN	OPEN	OPEN	OPEN	OPEN	OPEN	OPEN

c10459001a004_0410_4/6_0.0

ANALOG PWB CIRCUIT DIAGRAM (5/6) SHEET 5

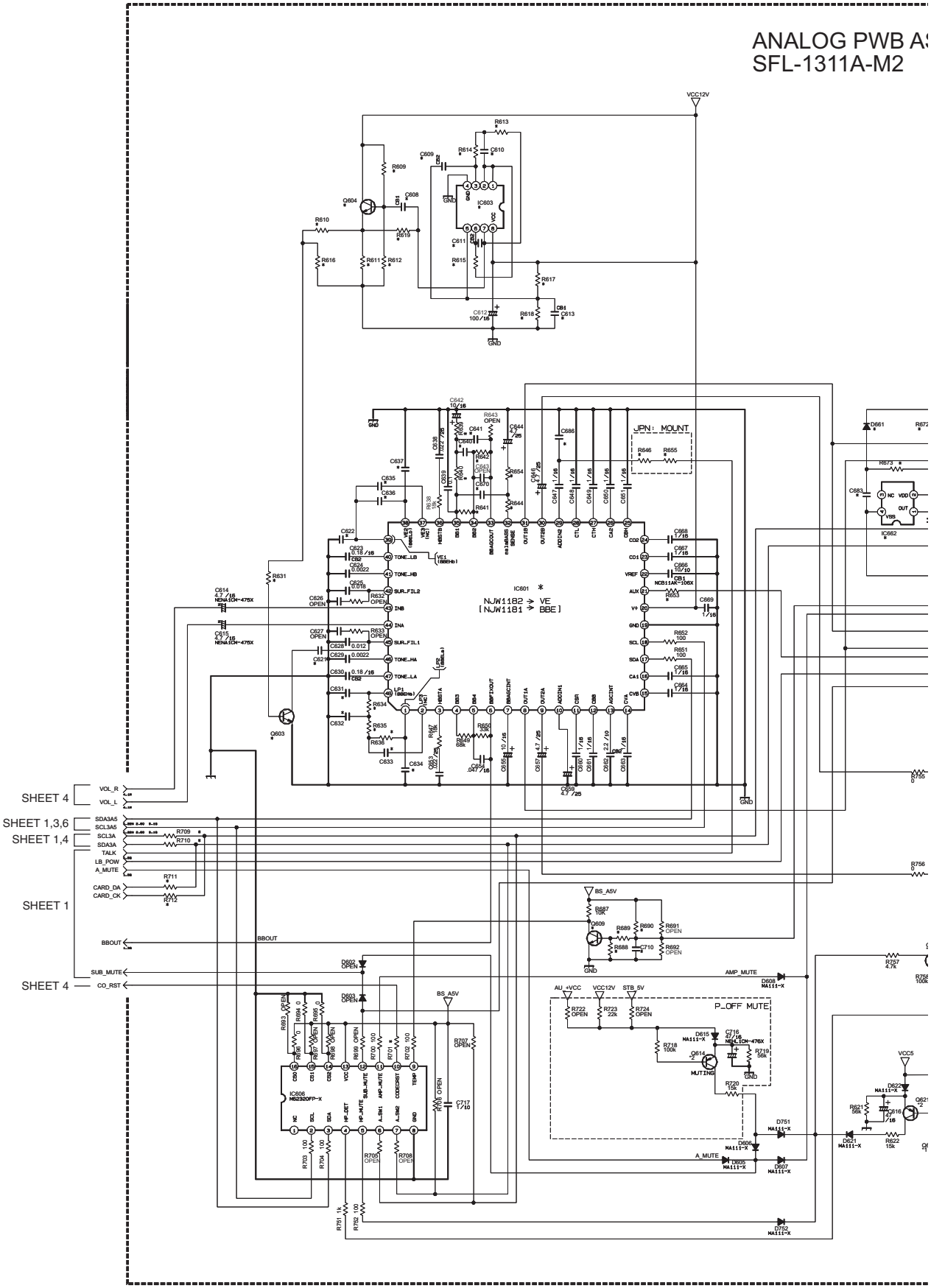

ASS'Y(5/6)

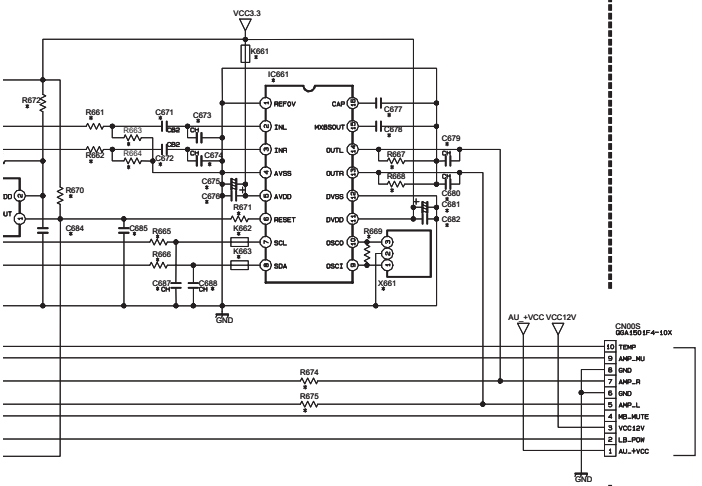

D-AMP PWB
CN00S
SHEET 26

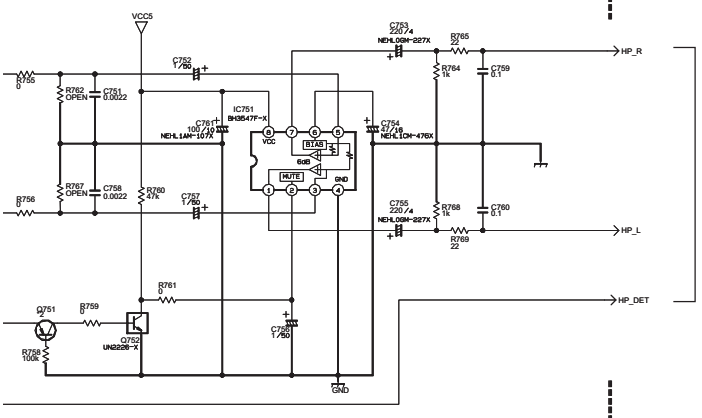

ANALOG PWB(1/6)
SHEET 1

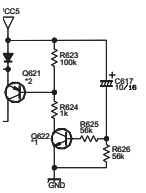

* DIFFERENCE LIST

MODEL	JPN	US					
		32X7/8#	37/40X7/8#	32X857	37X987	40/46PH97	40/46PH97
	SFL-1321A	SFL-1311A	SFL-1312A	SFL-1315A	SFL-1316A	SFL-1313A	SFL-1314A
	LGA10718-01P	LGA10712-01P	LGA10718-02P	LGA10718-03P	LGA10712-04P	LGA10718-01P	LGA10718-02P
	DLLC10598	DLLC10541	DLLC10541 -02	DLLC10541 -03	DLLC10541 -04	DLLC10761	DLLC10761 -02
IC601	NJW1182FP1	NJW1182FP1	NJW1182FP1	NJW1182FP1	NJW1182FP2	NJW1182FP1	NJW1182FP2
C622	OPEN	OPEN	OPEN	OPEN	OPEN	OPEN	OPEN
C631	OPEN	OPEN	OPEN	OPEN	OPEN	OPEN	OPEN
C632	0.1	0.1	0.1	0.1	0.1	0.1	0.1
C633	0.0082	0.0082	0.0082	0.0082	0.0082	0.0082	0.0082
C634	0.0082	0.0082	0.0082	0.0082	0.0082	0.0082	0.0082
C635	680p	680p	680p	680p	680p	680p	680p
C636	680p	680p	680p	680p	680p	680p	680p
C637	OPEN	OPEN	OPEN	OPEN	OPEN	OPEN	OPEN
R634	15k	15k	15k	15k	15k	15k	15k
R635	56k	56k	56k	56k	56k	56k	56k
R636	47k	47k	47k	47k	47k	47k	47k
C686	0.01	0	0	0	0	0	0
R646	1k	OPEN	OPEN	OPEN	OPEN	OPEN	OPEN
R655	0	OPEN	OPEN	OPEN	OPEN	OPEN	OPEN
R639	820	820	820	820	1k	1k	1k
R640	820	820	820	820	1k	1k	1k
R641	OPEN	OPEN	OPEN	OPEN	OPEN	OPEN	OPEN
R642	5.6k	5.6k	5.6k	5.6k	6.8k	6.8k	6.8k
R644	3.9k	3.9k	3.9k	3.9k	3.9k	3.9k	3.9k
R654	1.8k	1.8k	1.8k	1.8k	1.8k	1.8k	1.8k
C640	1/16	1/16	1/16	1/16	1/16	1/16	1/16
C641	1/16	1/16	1/16	1/16	1/16	1/16	1/16
C670	1/16	1/16	1/16	1/16	1/16	1/16	1/16
IC603	RC-4558D-X	OPEN	OPEN	OPEN	OPEN	OPEN	OPEN
Q603	*1	OPEN	OPEN	OPEN	OPEN	OPEN	OPEN
Q604	*1	OPEN	OPEN	OPEN	OPEN	OPEN	OPEN
R609	10k	OPEN	OPEN	OPEN	OPEN	OPEN	OPEN
R610	22k	OPEN	OPEN	OPEN	OPEN	OPEN	OPEN
R611	1k	OPEN	OPEN	OPEN	OPEN	OPEN	OPEN
R612	10k	OPEN	OPEN	OPEN	OPEN	OPEN	OPEN
R613	220k	OPEN	OPEN	OPEN	OPEN	OPEN	OPEN
R614	220k	OPEN	OPEN	OPEN	OPEN	OPEN	OPEN
R615	180k	OPEN	OPEN	OPEN	OPEN	OPEN	OPEN
R616	18k	OPEN	OPEN	OPEN	OPEN	OPEN	OPEN
R617	22k	OPEN	OPEN	OPEN	OPEN	OPEN	OPEN
R618	22k	OPEN	OPEN	OPEN	OPEN	OPEN	OPEN
R619	OPEN	OPEN	OPEN	OPEN	OPEN	OPEN	OPEN
R631	15k	OPEN	OPEN	OPEN	OPEN	OPEN	OPEN
C608	MCB114K-105M	OPEN	OPEN	OPEN	OPEN	OPEN	OPEN
C609	0.12/25	OPEN	OPEN	OPEN	OPEN	OPEN	OPEN
C610	0.22/16	OPEN	OPEN	OPEN	OPEN	OPEN	OPEN
C611	0.12/25	OPEN	OPEN	OPEN	OPEN	OPEN	OPEN
C613	MCB114K-105M	OPEN	OPEN	OPEN	OPEN	OPEN	OPEN
C621	0.0039	OPEN	OPEN	OPEN	OPEN	OPEN	OPEN
R701	100	OPEN	OPEN	OPEN	100	100	100
Q609	OPEN	OPEN	OPEN	OPEN	OPEN	OPEN	OPEN
R688	OPEN	OPEN	OPEN	OPEN	OPEN	OPEN	OPEN
R689	OPEN	OPEN	OPEN	OPEN	OPEN	OPEN	OPEN
R690	OPEN	OPEN	OPEN	OPEN	OPEN	OPEN	OPEN
C710	OPEN	OPEN	OPEN	OPEN	OPEN	OPEN	OPEN
IC661	MK3000CS-X	OPEN	MK3000CS-X	OPEN	MK3000CS-X	MK3000CS-X	MK3000CS-X
IC662	OPEN	OPEN	OPEN	OPEN	OPEN	OPEN	OPEN
X661	HA20687-001X	OPEN	HA20687-001X	HA20687-001X	HA20687-001X	HA20687-001X	HA20687-001X
K681	NSR0402-002X	OPEN	NSR0402-002X	NSR0402-002X	NSR0402-002X	NSR0402-002X	NSR0402-002X
D661	OPEN	OPEN	OPEN	OPEN	OPEN	OPEN	OPEN
R661	3.3k	OPEN	6.8k	OPEN	3.3k	3.3k	3.3k
R662	3.3k	OPEN	6.8k	OPEN	3.3k	3.3k	3.3k
R663	OPEN	OPEN	OPEN	OPEN	OPEN	OPEN	OPEN
R664	OPEN	OPEN	OPEN	OPEN	OPEN	OPEN	OPEN
R665	100	OPEN	100	OPEN	100	100	100
R666	100	OPEN	100	OPEN	100	100	100
R667	OPEN	OPEN	OPEN	OPEN	OPEN	OPEN	OPEN
R668	OPEN	OPEN	OPEN	OPEN	OPEN	OPEN	OPEN
R669	1M	OPEN	1M	OPEN	1M	1M	1M
R670	10k	OPEN	10k	OPEN	10k	10k	10k
R671	0	OPEN	0	OPEN	0	0	0
R672	OPEN	OPEN	OPEN	OPEN	OPEN	OPEN	OPEN
R673	OPEN	OPEN	OPEN	OPEN	OPEN	OPEN	OPEN
R674	OPEN	0	OPEN	0	OPEN	OPEN	OPEN
R675	OPEN	0	OPEN	0	OPEN	OPEN	OPEN
C671	2.2/10	OPEN	2.2/10	OPEN	2.2/10	2.2/10	2.2/10
C672	2.2/10	OPEN	2.2/10	OPEN	2.2/10	2.2/10	2.2/10
C673	33p	OPEN	33p	OPEN	33p	33p	33p
C674	33p	OPEN	33p	OPEN	33p	33p	33p
C675	10/16	OPEN	10/16	OPEN	10/16	10/16	10/16
C676	0.1	OPEN	0.1	OPEN	0.1	0.1	0.1
C677	1/16	OPEN	1/16	OPEN	1/16	1/16	1/16
C678	0.015	OPEN	0.015	OPEN	0.015	0.015	0.015
C679	33p	OPEN	33p	OPEN	33p	33p	33p
C680	33p	OPEN	33p	OPEN	33p	33p	33p
C681	10/16	OPEN	10/16	OPEN	10/16	10/16	10/16
C682	0.1	OPEN	0.1	OPEN	0.1	0.1	0.1
C683	OPEN	OPEN	OPEN	OPEN	OPEN	OPEN	OPEN
C684	OPEN	OPEN	OPEN	OPEN	OPEN	OPEN	OPEN
C685	0.1	OPEN	0.1	OPEN	0.1	0.1	0.1
R709	OPEN	OPEN	OPEN	OPEN	OPEN	OPEN	OPEN
R710	OPEN	OPEN	OPEN	OPEN	OPEN	OPEN	OPEN
R711	0	OPEN	0	OPEN	0	0	0
R712	0	OPEN	0	OPEN	0	0	0
R653	5.6k	OPEN	5.6k	OPEN	5.6k	5.6k	5.6k
K662	O	OPEN	0	OPEN	O	O	O
K663	O	OPEN	0	OPEN	O	O	O
C687	68p	OPEN	68p	OPEN	68p	68p	68p
C688	68p	OPEN	68p	OPEN	68p	68p	68p

NJW11BX

音声案内

B. B. 音質設計

8Hz

DSP

温度検出

MaxxBass

c10459001a003_0410_3/6_0.0

ANALOG PWB CIRCUIT DIAGRAM (6/6) SHEET 6

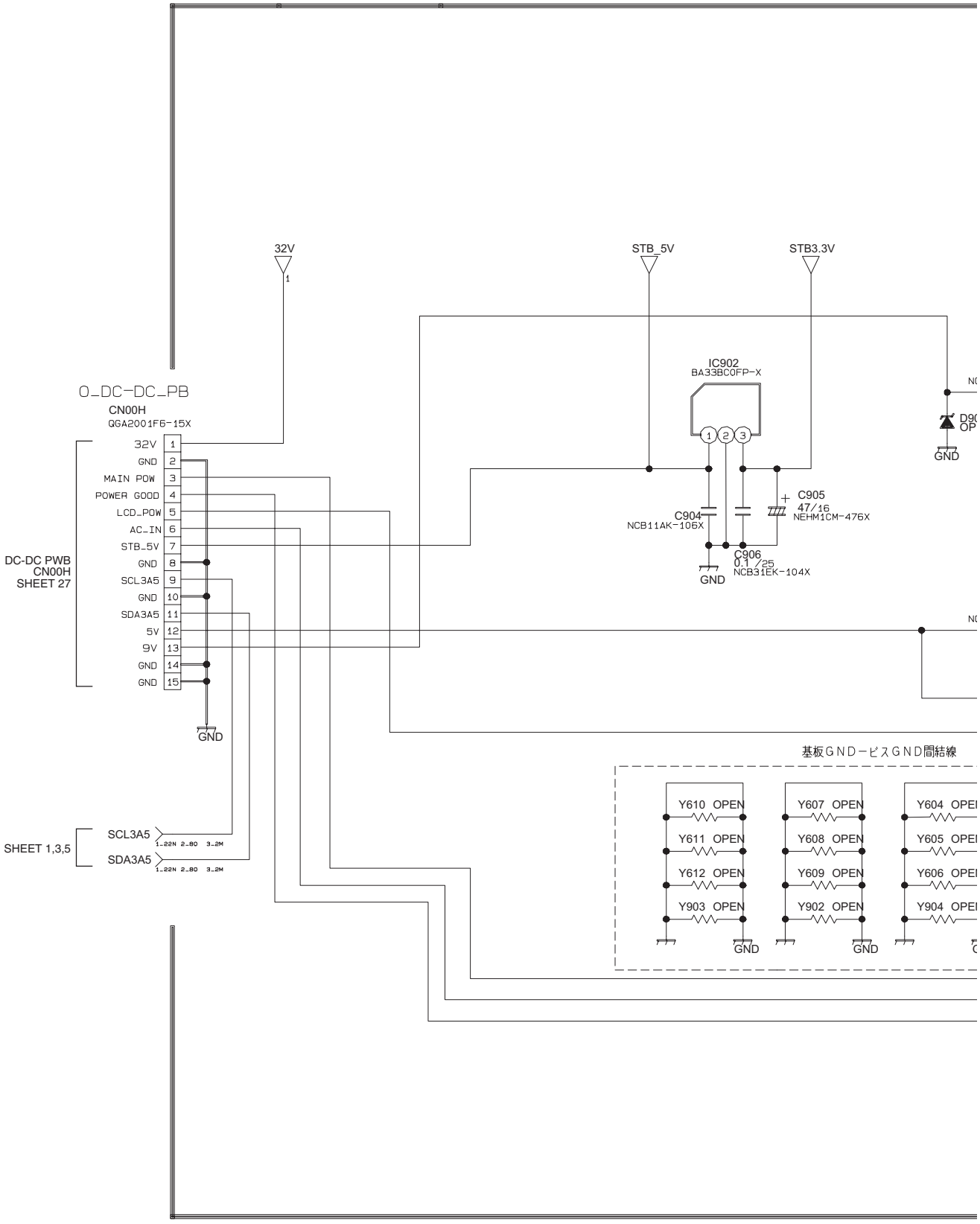

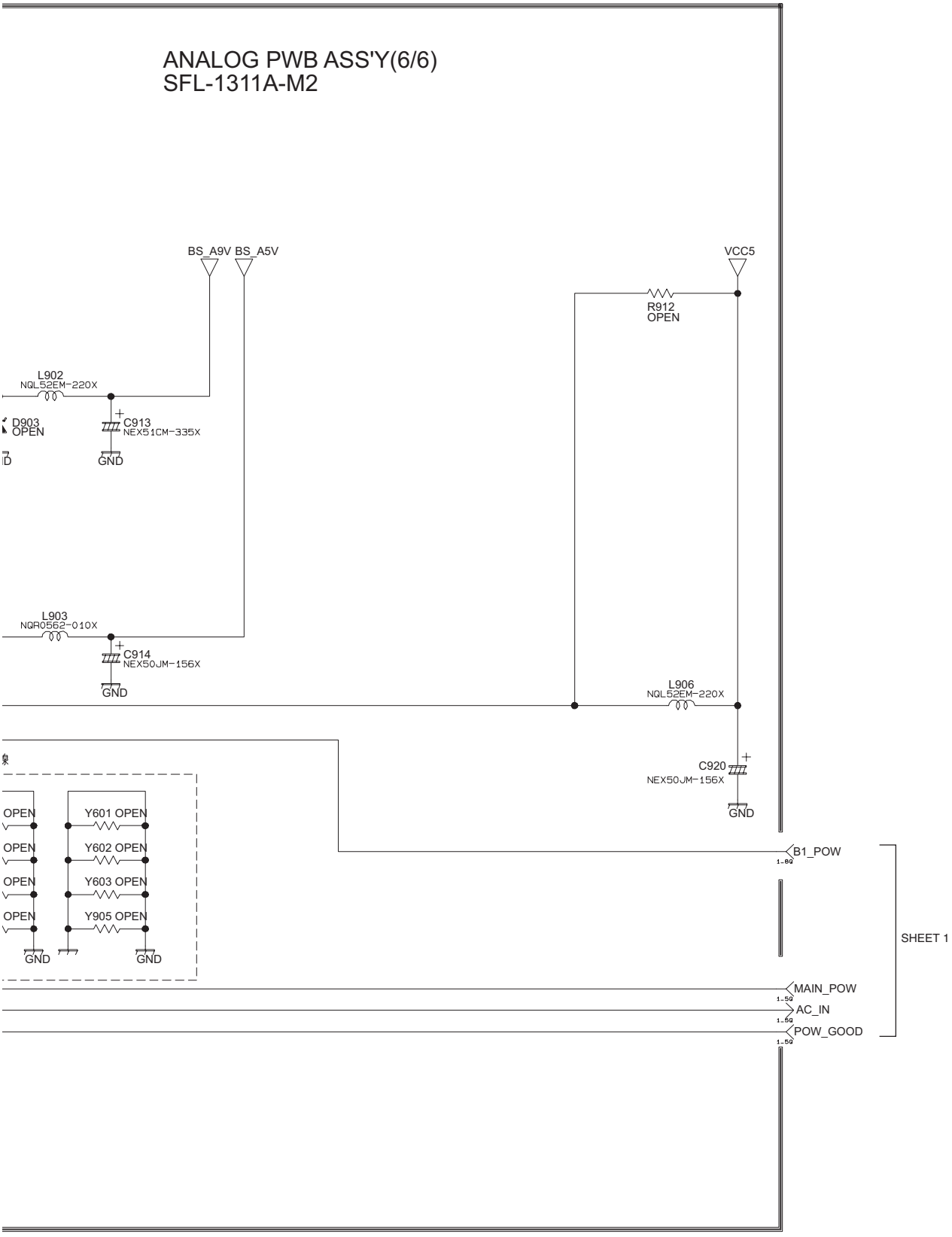

c10459001a005_0410_5/6_0.0

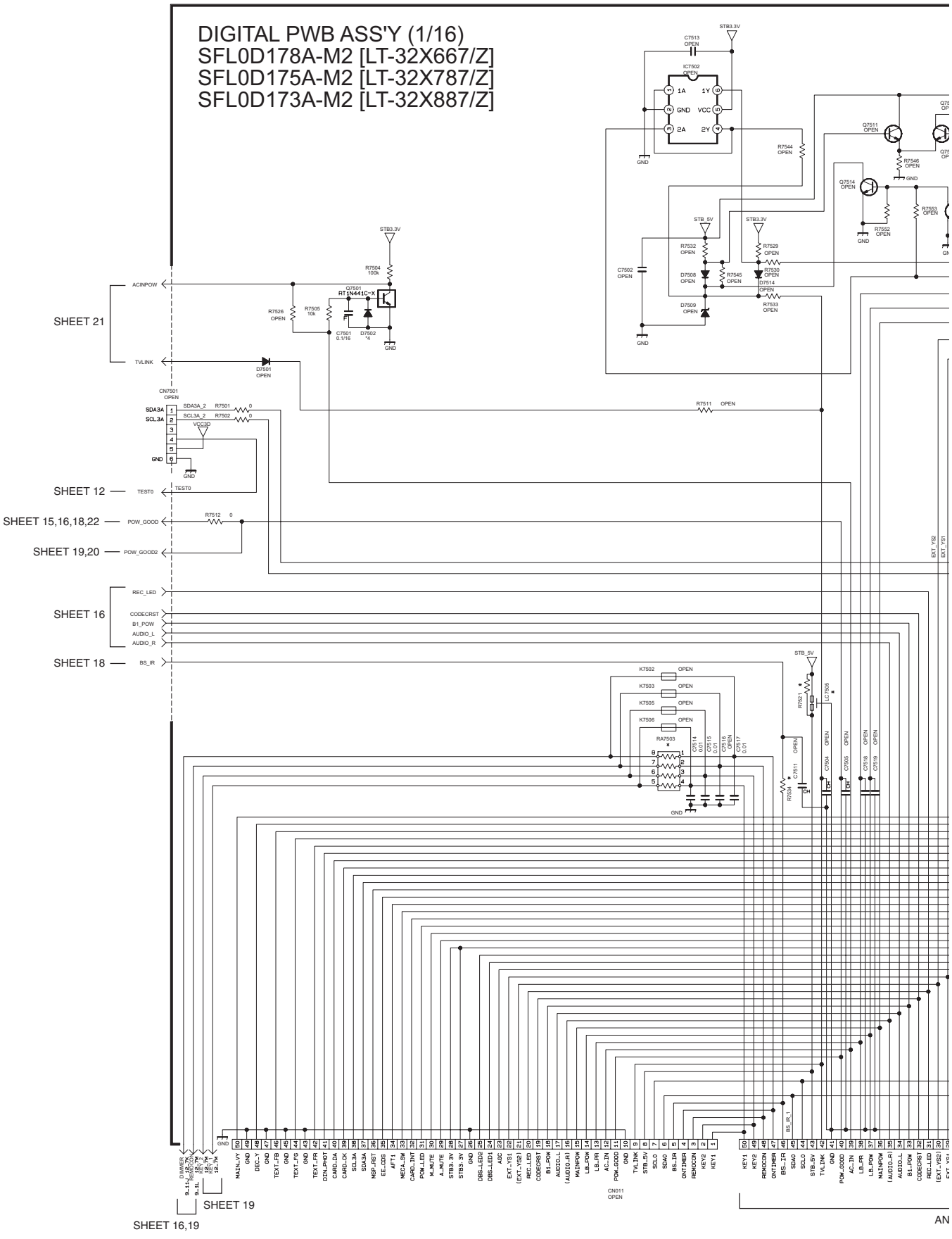
DIGITAL PWB ASS'Y (1/16)
SFL0D178A-M2 [LT-32X667/Z]
SFL0D175A-M2 [LT-32X787/Z]
SFL0D173A-M2 [LT-32X887/Z]
SHEET 21
SHEET 12
SHEET 15,16,18,22
SHEET 19,20
SHEET 16
SHEET 18
SHEET 19
SHEET 16,19
ACINPOW
TVLINK
TEST0
POW_GOOD
POW_GOOD2
REC_LED
CODECRST
B1_POW
AUDIO_L
AUDIO_R
BS_IR
STB3.3V
STB_5V
GND
IC7502
OPEN
Q7501
RT1N441C-X
CN7501
OPEN
CN011
OPEN
RA7503
K7502
K7503
K7505
K7506
MAIN_VY
DEC_Y
TEXT_FB
TEXT_FG
TEXT_FR
DIN_PHOT
CARD_DA
CARD_CK
SDA3A
MSP_RST
EE_CDS
AFT1
MECA_SW
CARD_INT
POW_LED
M_MUTE
A_MUTE
DBS_LED0
DBS_LED1
AGC
EXT_YS1
EXT_YS2
MAINPOW
LB_SC
LB_PR
AC_IN
KEY1
KEY2
REMOCN
ONTIMER
BS_IR_1
SCL0
SDA0
SCL3A
SDA3A_2
SCL3A_2
VCC3D

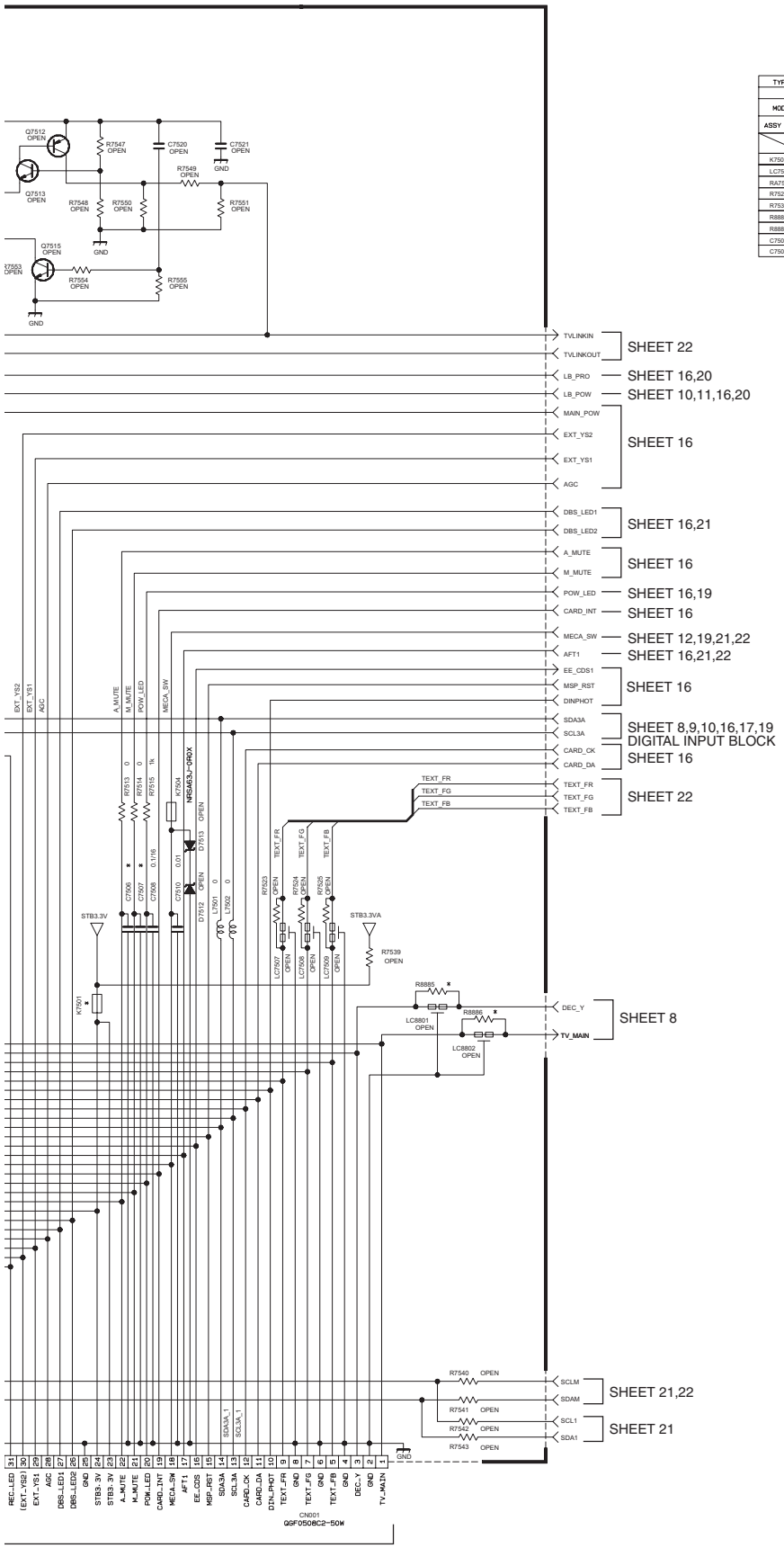

ANALOG PWB(1/16)
CN001
SHEET 1

* DIFFERENCE LIST

TYPE	LCD								
	JPN			US					
MODEL	LT-46LH800	LT-37LC85	LT-26LC80	LT-40X887 /X787	LT-37X887 /X787/X667	LT-32X887 X667/X787	LT-32XM57	LT-46FH97 /40FH97	LT-46FN97 /40FH97
ASSY NO.	SFL-0D071A	SFL-0D072A	SFL-0D074A	SFL-0D171A etc	SFL-0D172A etc	SFL-0D173A 175A,178Aetc	SFL-0D180A	SFL-0D1B2A etc	SFL-0D1B4A etc
	QLLC10547	QLLC10547 -02	QLLC10547 -04	QLLC10547 -05 etc	QLLC10547 -06 etc	QLLC10547 -07 etc	QLLC10547 -14	QLLC10547 -16 etc	QLLC10547 -18 etc
K7501	NRSA03J -0R0X	NRSA03J -0R0X	NRSA02J -0R0X	NQR0413 -002X	NQR0413 -002X	NQR0413 -002X	NQR0413 -002X	NQR0413 -002X	NQR0413 -002X
LC7505	OPEN	OPEN	OPEN	NQR0483 -005X	NQR0483 -005X	NQR0483 -005X	NQR0483 -005X	NQR0483 -005X	NQR0483 -005X
RA7503	NRZ0040 -0R0X	NRZ0040 -0R0X	NRZ0040 -0R0X	NQR0271 -004X	NQR0271 -004X	NQR0271 -004X	NQR0271 -004X	NQR0271 -004X	NQR0271 -004X
R7521	0	0	0	OPEN	OPEN	OPEN	OPEN	OPEN	OPEN
R7534	0	0	0	OPEN	OPEN	OPEN	OPEN	OPEN	OPEN
R8885	0	0	0	OPEN	OPEN	OPEN	OPEN	OPEN	OPEN
R8886	0	0	0	OPEN	OPEN	OPEN	OPEN	OPEN	OPEN
C7506	OPEN	OPEN	OPEN	0.01	0.01	0.01	0.01	0.01	0.01
C7507	OPEN	OPEN	OPEN	0.01	0.01	0.01	0.01	0.01	0.01

NOTE.

*1:NQR0498-001X
*2:NQR0489-002X
*4:MA111-X
*5:1SS355-X
RA0:NRZ0034-0R0W
PNP:2SA1530A/QR/-X
NPN:2SC3928A/QR/-X
L10:NQL79GM-100X
L22:NQL79GM-220X

c10463001a011_0425_11/17_0.0

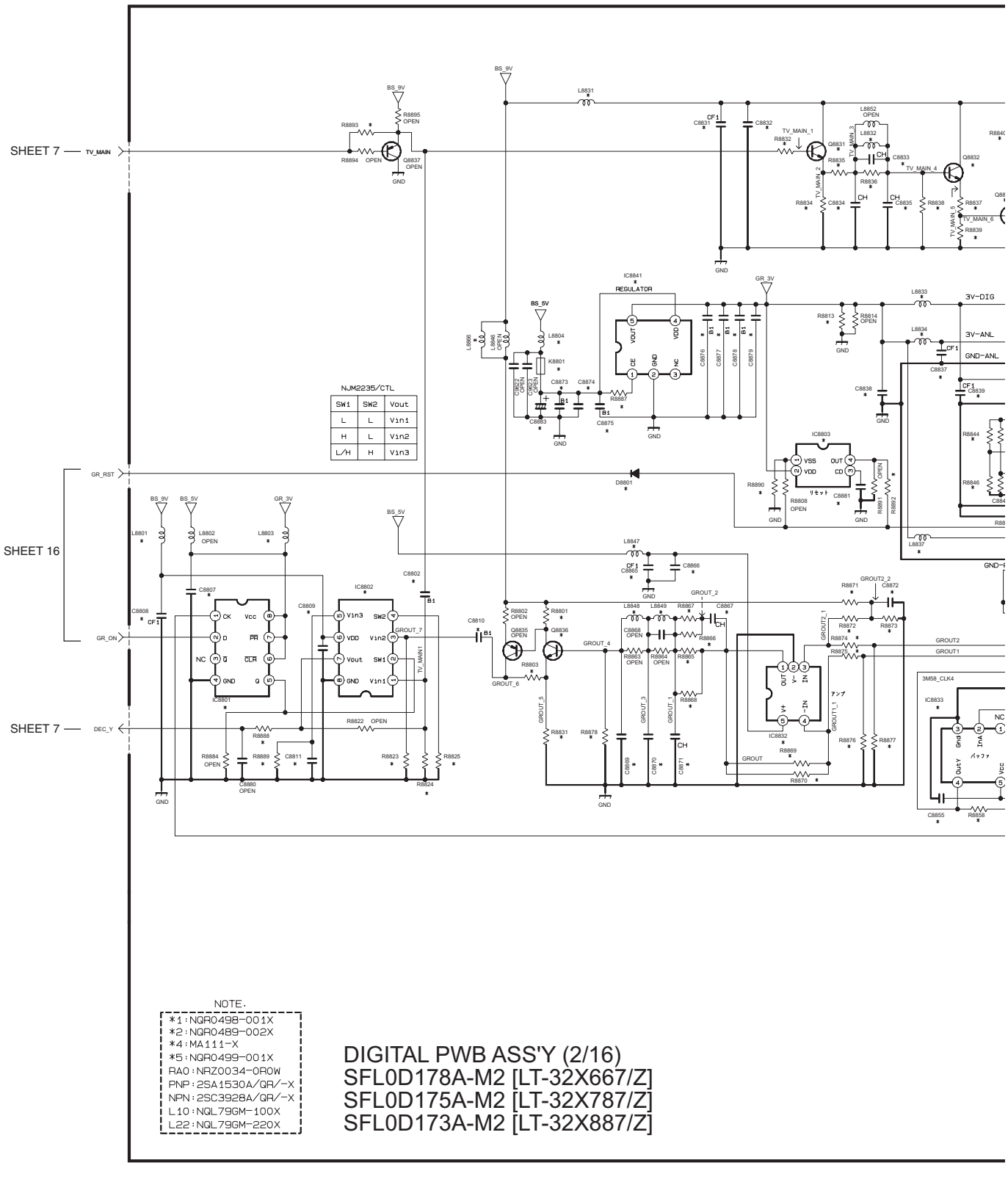

NOTE.
- *1:NQR0498-001X
- *2:NQR0489-002X
- *4:MA111-X
- *5:NQR0499-001X
- RA0:NRZ0034-0R0W
- PNP:2SA1530A/QR/-X
- NPN:2SC3928A/QR/-X
- L10:NQL79GM-100X
- L22:NQL79GM-220X

DIGITAL PWB ASS'Y (2/16)
SFL0D178A-M2 [LT-32X667/Z]
SFL0D175A-M2 [LT-32X787/Z]
SFL0D173A-M2 [LT-32X887/Z]

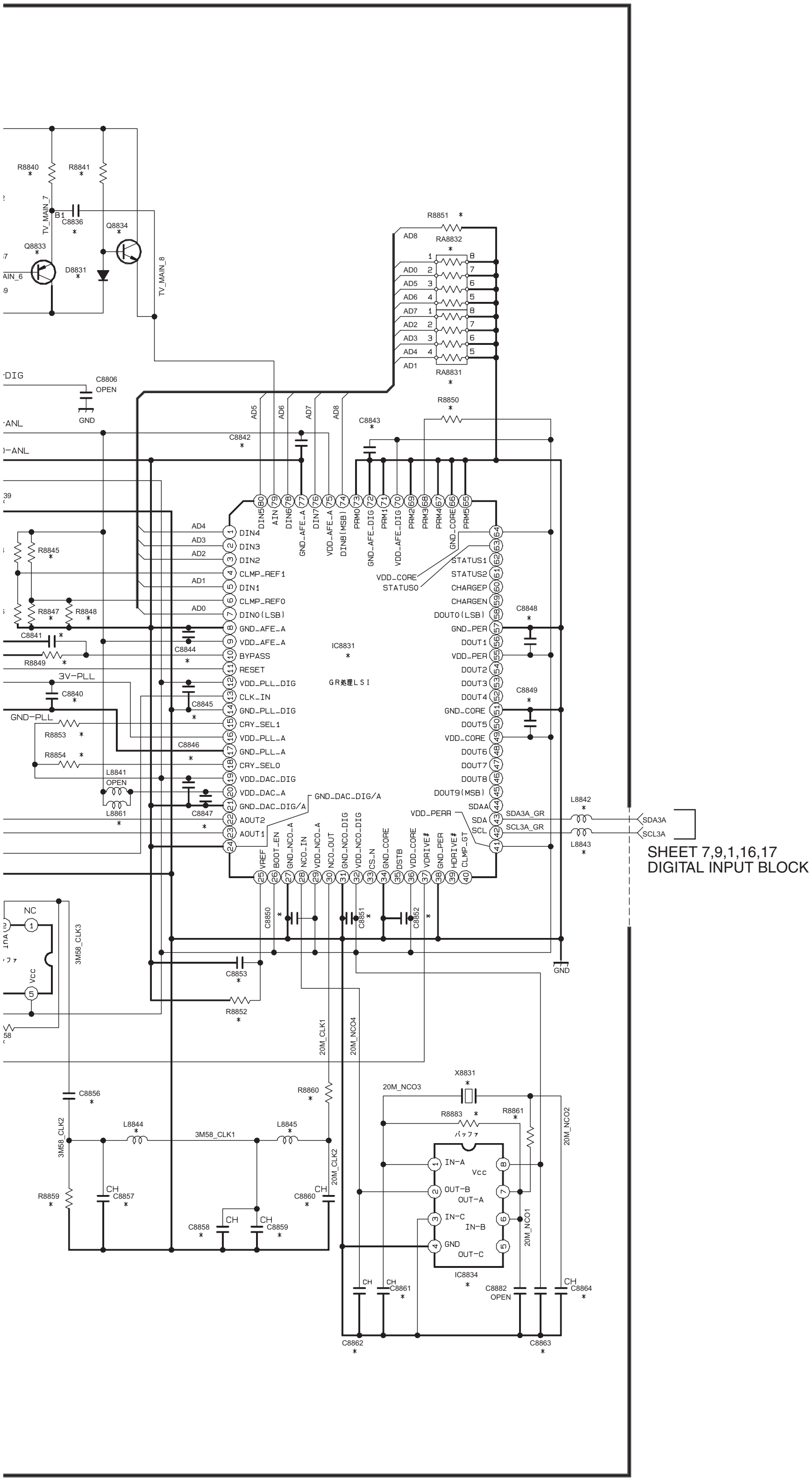

* DIFFERENCE LIST

TYPE	LCD								
	JPN			US					
MODEL	LT-46LH800	LT-37LC85	LT-26LC80	LT-40X887 /X787	LT-37X887 /X787/X667	LT-32X887 X667/X787	LT-32XM57	LT-46FH97 /40FH97	LT-46FN97 /40FN97
ASSY NO.	SFL-0D071A	SFL-0D072A	SFL-0D074A	SFL-0D171A etc	SFL-0D172A etc	SFL-0D173A 175A, 178A etc	SFL-0D180A	SFL-0D182A etc	SFL-0D184A etc
	0LLC10547	0LLC10547 -02	0LLC10547 -04	0LLC10547 -05 etc	0LLC10547 -06 etc	0LLC10547 -07 etc	0LLC10547 -14	0LLC10547 -16 etc	0LLC10547 -18 etc
X8831	NAX0118-001X	NAX0118-001X	NAX0118-001X	OPEN	OPEN	OPEN	OPEN	OPEN	OPEN
IC8801	TC7W74F-X	TC7W74F-X	TC7W74F-X	OPEN	OPEN	OPEN	OPEN	OPEN	OPEN
IC8802	NJM2235V-X	NJM2235V-X	NJM2235V-X	OPEN	OPEN	OPEN	OPEN	OPEN	OPEN
IC8803	S-80928CLNB-G-W	S-80928CLNB-G-W	S-80928CLNB-G-W	OPEN	OPEN	OPEN	OPEN	OPEN	OPEN
IC8831	OR43304BMQC	OR43304BMQC	OR43304BMQC	OPEN	OPEN	OPEN	OPEN	OPEN	OPEN
IC8832	EL8101IWZ-X	EL8101IWZ-X	EL8101IWZ-X	OPEN	OPEN	OPEN	OPEN	OPEN	OPEN
IC8833	TC7S04FU-X	TC7S04FU-X	TC7S04FU-X	OPEN	OPEN	OPEN	OPEN	OPEN	OPEN
IC8834	TC7WHU04FU-X	TC7WHU04FU-X	TC7WHU04FU-X	OPEN	OPEN	OPEN	OPEN	OPEN	OPEN
IC8841	R1170H331B-X	R1170H331B-X	R1170H331B-X	OPEN	OPEN	OPEN	OPEN	OPEN	OPEN
Q8831	NPN	NPN	NPN	OPEN	OPEN	OPEN	OPEN	OPEN	OPEN
Q8832	NPN	NPN	NPN	OPEN	OPEN	OPEN	OPEN	OPEN	OPEN
Q8833	PNP	PNP	PNP	OPEN	OPEN	OPEN	OPEN	OPEN	OPEN
Q8834	NPN	NPN	NPN	OPEN	OPEN	OPEN	OPEN	OPEN	OPEN
Q8836	NPN	NPN	NPN	OPEN	OPEN	OPEN	OPEN	OPEN	OPEN
D8801	*4	*4	*4	OPEN	OPEN	OPEN	OPEN	OPEN	OPEN
D8831	*4	*4	*4	OPEN	OPEN	OPEN	OPEN	OPEN	OPEN
K8801	*2	*2	*2	OPEN	OPEN	OPEN	OPEN	OPEN	OPEN
L8801	NRSA02J-0R0X	NRSA02J-0R0X	NRSA02J-0R0X	OPEN	OPEN	OPEN	OPEN	OPEN	OPEN
L8803	*5	*5	*5	OPEN	OPEN	OPEN	OPEN	OPEN	OPEN
L8804	NQL52EM-101X	NQL52EM-101X	NQL52EM-101X	OPEN	OPEN	OPEN	OPEN	OPEN	OPEN
L8831	NQR0413-003X	NQR0413-003X	NQR0413-003X	OPEN	OPEN	OPEN	OPEN	OPEN	OPEN
L8832	NQL092K-6R8X	NQL092K-6R8X	NQL092K-6R8X	OPEN	OPEN	OPEN	OPEN	OPEN	OPEN
L8833	NRSA02J-0R0X	NRSA02J-0R0X	NRSA02J-0R0X	OPEN	OPEN	OPEN	OPEN	OPEN	OPEN
L8834	NRSA02J-0R0X	NRSA02J-0R0X	NRSA02J-0R0X	OPEN	OPEN	OPEN	OPEN	OPEN	OPEN
L8837	NQL914K-470X	NQL914K-470X	NQL914K-470X	OPEN	OPEN	OPEN	OPEN	OPEN	OPEN
L8842	NQL092K-100X	NQL092K-100X	NQL092K-100X	OPEN	OPEN	OPEN	OPEN	OPEN	OPEN
L8843	NQL092K-100X	NQL092K-100X	NQL092K-100X	OPEN	OPEN	OPEN	OPEN	OPEN	OPEN
L8844	NQL092K-100X	NQL092K-100X	NQL092K-100X	OPEN	OPEN	OPEN	OPEN	OPEN	OPEN
L8845	NQL092K-100X	NQL092K-100X	NQL092K-100X	OPEN	OPEN	OPEN	OPEN	OPEN	OPEN
L8847	NQR0413-003X	NQR0413-003X	NQR0413-003X	OPEN	OPEN	OPEN	OPEN	OPEN	OPEN
L8848	NQL092K-2R2X	NQL092K-2R2X	NQL092K-2R2X	OPEN	OPEN	OPEN	OPEN	OPEN	OPEN
L8849	NQL092K-2R2X	NQL092K-2R2X	NQL092K-2R2X	OPEN	OPEN	OPEN	OPEN	OPEN	OPEN
L8861	NQR0499-001X	NQR0499-001X	NQR0499-001X	OPEN	OPEN	OPEN	OPEN	OPEN	OPEN
L8866	NQR0499-001X	NQR0499-001X	NQR0499-001X	OPEN	OPEN	OPEN	OPEN	OPEN	OPEN
RA8831	NRZ0034-103W	NRZ0034-103W	NRZ0034-103W	OPEN	OPEN	OPEN	OPEN	OPEN	OPEN
RA8832	NRZ0034-103W	NRZ0034-103W	NRZ0034-103W	OPEN	OPEN	OPEN	OPEN	OPEN	OPEN
R8801	0	0	0	OPEN	OPEN	OPEN	OPEN	OPEN	OPEN
R8803	0	0	0	OPEN	OPEN	OPEN	OPEN	OPEN	OPEN
R8813	560	560	560	OPEN	OPEN	OPEN	OPEN	OPEN	OPEN
R8823	1M	1M	1M	OPEN	OPEN	OPEN	OPEN	OPEN	OPEN
R8824	470k	470k	470k	OPEN	OPEN	OPEN	OPEN	OPEN	OPEN
R8825	0	0	0	OPEN	OPEN	OPEN	OPEN	OPEN	OPEN
R8831	2.2k	2.2k	2.2k	OPEN	OPEN	OPEN	OPEN	OPEN	OPEN
R8832	100	100	100	OPEN	OPEN	OPEN	OPEN	OPEN	OPEN
R8834	1.2k	1.2k	1.2k	OPEN	OPEN	OPEN	OPEN	OPEN	OPEN
R8835	180	180	180	OPEN	OPEN	OPEN	OPEN	OPEN	OPEN
R8836	680	680	680	OPEN	OPEN	OPEN	OPEN	OPEN	OPEN
R8837	100	100	100	OPEN	OPEN	OPEN	OPEN	OPEN	OPEN
R8838	1k	1k	1k	OPEN	OPEN	OPEN	OPEN	OPEN	OPEN
R8839	1k	1k	1k	OPEN	OPEN	OPEN	OPEN	OPEN	OPEN
R8840	5.6k	5.6k	5.6k	OPEN	OPEN	OPEN	OPEN	OPEN	OPEN
R8841	4.7k	4.7k	4.7k	OPEN	OPEN	OPEN	OPEN	OPEN	OPEN
R8844	3.9k	3.9k	3.9k	OPEN	OPEN	OPEN	OPEN	OPEN	OPEN
R8845	3.9k	3.9k	3.9k	OPEN	OPEN	OPEN	OPEN	OPEN	OPEN
R8846	1k	1k	1k	OPEN	OPEN	OPEN	OPEN	OPEN	OPEN
R8847	1.2k	1.2k	1.2k	OPEN	OPEN	OPEN	OPEN	OPEN	OPEN
R8848	4.7k	4.7k	4.7k	OPEN	OPEN	OPEN	OPEN	OPEN	OPEN
R8849	47k	47k	47k	OPEN	OPEN	OPEN	OPEN	OPEN	OPEN
R8850	10k	10k	10k	OPEN	OPEN	OPEN	OPEN	OPEN	OPEN
R8851	10k	10k	10k	OPEN	OPEN	OPEN	OPEN	OPEN	OPEN
R8852	10k	10k	10k	OPEN	OPEN	OPEN	OPEN	OPEN	OPEN
R8853	10k	10k	10k	OPEN	OPEN	OPEN	OPEN	OPEN	OPEN
R8854	10k	10k	10k	OPEN	OPEN	OPEN	OPEN	OPEN	OPEN
R8858	1M	1M	1M	OPEN	OPEN	OPEN	OPEN	OPEN	OPEN
R8859	1.8k	1.8k	1.8k	OPEN	OPEN	OPEN	OPEN	OPEN	OPEN
R8860	100	100	100	OPEN	OPEN	OPEN	OPEN	OPEN	OPEN
R8861	330	330	330	OPEN	OPEN	OPEN	OPEN	OPEN	OPEN
R8865	47	47	47	OPEN	OPEN	OPEN	OPEN	OPEN	OPEN
R8866	330	330	330	OPEN	OPEN	OPEN	OPEN	OPEN	OPEN
R8867	47	47	47	OPEN	OPEN	OPEN	OPEN	OPEN	OPEN
R8868	330	330	330	OPEN	OPEN	OPEN	OPEN	OPEN	OPEN
R8869	3.3k	3.3k	3.3k	OPEN	OPEN	OPEN	OPEN	OPEN	OPEN
R8870	47k	47k	47k	OPEN	OPEN	OPEN	OPEN	OPEN	OPEN
R8871	1k	1k	1k	OPEN	OPEN	OPEN	OPEN	OPEN	OPEN
R8872	8.2k	8.2k	8.2k	OPEN	OPEN	OPEN	OPEN	OPEN	OPEN
R8873	390	390	390	OPEN	OPEN	OPEN	OPEN	OPEN	OPEN
R8874	1.8k	1.8k	1.8k	OPEN	OPEN	OPEN	OPEN	OPEN	OPEN
R8875	1.8k	1.8k	1.8k	OPEN	OPEN	OPEN	OPEN	OPEN	OPEN
R8876	75	75	75	OPEN	OPEN	OPEN	OPEN	OPEN	OPEN
R8877	75	75	75	OPEN	OPEN	OPEN	OPEN	OPEN	OPEN
R8878	1k	1k	1k	OPEN	OPEN	OPEN	OPEN	OPEN	OPEN
R8883	1M	1M	1M	OPEN	OPEN	OPEN	OPEN	OPEN	OPEN
R8887	1k	1k	1k	OPEN	OPEN	OPEN	OPEN	OPEN	OPEN
R8888	0	0	0	OPEN	OPEN	OPEN	OPEN	OPEN	OPEN
R8889	1M	1M	1M	OPEN	OPEN	OPEN	OPEN	OPEN	OPEN
R8890	0	0	0	OPEN	OPEN	OPEN	OPEN	OPEN	OPEN
R8892	3.9k	3.9k	3.9k	OPEN	OPEN	OPEN	OPEN	OPEN	OPEN
R8893	0	0	0	OPEN	OPEN	OPEN	OPEN	OPEN	OPEN
C8802	10/10	10/10	10/10	OPEN	OPEN	OPEN	OPEN	OPEN	OPEN
C8807	0.1/16	0.1/16	0.1/16	OPEN	OPEN	OPEN	OPEN	OPEN	OPEN
C8808	4.7/16	4.7/16	4.7/16	OPEN	OPEN	OPEN	OPEN	OPEN	OPEN
C8809	0.01/50	0.01/50	0.01/50	OPEN	OPEN	OPEN	OPEN	OPEN	OPEN
C8810	10/10	10/10	10/10	OPEN	OPEN	OPEN	OPEN	OPEN	OPEN
C8811	0.1/16	0.1/16	0.1/16	OPEN	OPEN	OPEN	OPEN	OPEN	OPEN
C8831	4.7/16	4.7/16	4.7/16	OPEN	OPEN	OPEN	OPEN	OPEN	OPEN
C8832	0.1/16	0.1/16	0.1/16	OPEN	OPEN	OPEN	OPEN	OPEN	OPEN
C8833	15p/50	15p/50	15p/50	OPEN	OPEN	OPEN	OPEN	OPEN	OPEN
C8834	220p/50	220p/50	220p/50	OPEN	OPEN	OPEN	OPEN	OPEN	OPEN
C8835	120p/50	120p/50	120p/50	OPEN	OPEN	OPEN	OPEN	OPEN	OPEN
C8836	4.7/16	4.7/16	4.7/16	OPEN	OPEN	OPEN	OPEN	OPEN	OPEN
C8837	4.7/16	4.7/16	4.7/16	OPEN	OPEN	OPEN	OPEN	OPEN	OPEN
C8838	0.1/16	0.1/16	0.1/16	OPEN	OPEN	OPEN	OPEN	OPEN	OPEN
C8839	4.7/16	4.7/16	4.7/16	OPEN	OPEN	OPEN	OPEN	OPEN	OPEN
C8840	0.1/16	0.1/16	0.1/16	OPEN	OPEN	OPEN	OPEN	OPEN	OPEN
C8841	0.1/16	0.1/16	0.1/16	OPEN	OPEN	OPEN	OPEN	OPEN	OPEN
C8842	0.1/16	0.1/16	0.1/16	OPEN	OPEN	OPEN	OPEN	OPEN	OPEN
C8843	0.1/16	0.1/16	0.1/16	OPEN	OPEN	OPEN	OPEN	OPEN	OPEN
C8844	0.1/16	0.1/16	0.1/16	OPEN	OPEN	OPEN	OPEN	OPEN	OPEN
C8845	0.1/16	0.1/16	0.1/16	OPEN	OPEN	OPEN	OPEN	OPEN	OPEN
C8846	0.1/16	0.1/16	0.1/16	OPEN	OPEN	OPEN	OPEN	OPEN	OPEN
C8847	0.1/16	0.1/16	0.1/16	OPEN	OPEN	OPEN	OPEN	OPEN	OPEN
C8848	0.1/16	0.1/16	0.1/16	OPEN	OPEN	OPEN	OPEN	OPEN	OPEN
C8849	0.1/16	0.1/16	0.1/16	OPEN	OPEN	OPEN	OPEN	OPEN	OPEN
C8850	0.1/16	0.1/16	0.1/16	OPEN	OPEN	OPEN	OPEN	OPEN	OPEN
C8851	0.1/16	0.1/16	0.1/16	OPEN	OPEN	OPEN	OPEN	OPEN	OPEN
C8852	0.1/16	0.1/16	0.1/16	OPEN	OPEN	OPEN	OPEN	OPEN	OPEN
C8853	1000p/50	1000p/50	1000p/50	OPEN	OPEN	OPEN	OPEN	OPEN	OPEN
C8855	0.1/16	0.1/16	0.1/16	OPEN	OPEN	OPEN	OPEN	OPEN	OPEN
C8856	1000p/50	1000p/50	1000p/50	OPEN	OPEN	OPEN	OPEN	OPEN	OPEN
C8857	270p/50	270p/50	270p/50	OPEN	OPEN	OPEN	OPEN	OPEN	OPEN
C8858	560p/50	560p/50	560p/50	OPEN	OPEN	OPEN	OPEN	OPEN	OPEN
C8859	270p/50	270p/50	270p/50	OPEN	OPEN	OPEN	OPEN	OPEN	OPEN
C8860	390p/50	390p/50	390p/50	OPEN	OPEN	OPEN	OPEN	OPEN	OPEN
C8861	33p/50	33p/50	33p/50	OPEN	OPEN	OPEN	OPEN	OPEN	OPEN
C8862	10p/50	10p/50	10p/50	OPEN	OPEN	OPEN	OPEN	OPEN	OPEN
C8863	0.1/16	0.1/16	0.1/16	OPEN	OPEN	OPEN	OPEN	OPEN	OPEN
C8864	33p/50	33p/50	33p/50	OPEN	OPEN	OPEN	OPEN	OPEN	OPEN
C8865	4.7/16	4.7/16	4.7/16	OPEN	OPEN	OPEN	OPEN	OPEN	OPEN
C8866	0.1/16	0.1/16	0.1/16	OPEN	OPEN	OPEN	OPEN	OPEN	OPEN
C8867	330p/50	330p/50	330p/50	OPEN	OPEN	OPEN	OPEN	OPEN	OPEN
C8869	1000p/50	1000p/50	1000p/50	OPEN	OPEN	OPEN	OPEN	OPEN	OPEN
C8870	1500p/50	1500p/50	1500p/50	OPEN	OPEN	OPEN	OPEN	OPEN	OPEN
C8871	220p/50	220p/50	220p/50	OPEN	OPEN	OPEN	OPEN	OPEN	OPEN
C8872	0.1/16	0.1/16	0.1/16	OPEN	OPEN	OPEN	OPEN	OPEN	OPEN
C8873	10/10	10/10	10/10	OPEN	OPEN	OPEN	OPEN	OPEN	OPEN
C8874	0.1/16	0.1/16	0.1/16	OPEN	OPEN	OPEN	OPEN	OPEN	OPEN
C8875	1/16	1/16	1/16	OPEN	OPEN	OPEN	OPEN	OPEN	OPEN
C8876	4.7/16	4.7/16	4.7/16	OPEN	OPEN	OPEN	OPEN	OPEN	OPEN
C8877	10/10	10/10	10/10	OPEN	OPEN	OPEN	OPEN	OPEN	OPEN
C8878	10/10	10/10	10/10	OPEN	OPEN	OPEN	OPEN	OPEN	OPEN
C8879	0.1/16	0.1/16	0.1/16	OPEN	OPEN	OPEN	OPEN	OPEN	OPEN
C8881	1000p	1000p	1000p	OPEN	OPEN	OPEN	OPEN	OPEN	OPEN
C8883	NEX60JM-227X	NEX60JM-227X	NEX60JM-227X	OPEN	OPEN	OPEN	OPEN	OPEN	OPEN

c10463001a015_0425_15/17_0.0

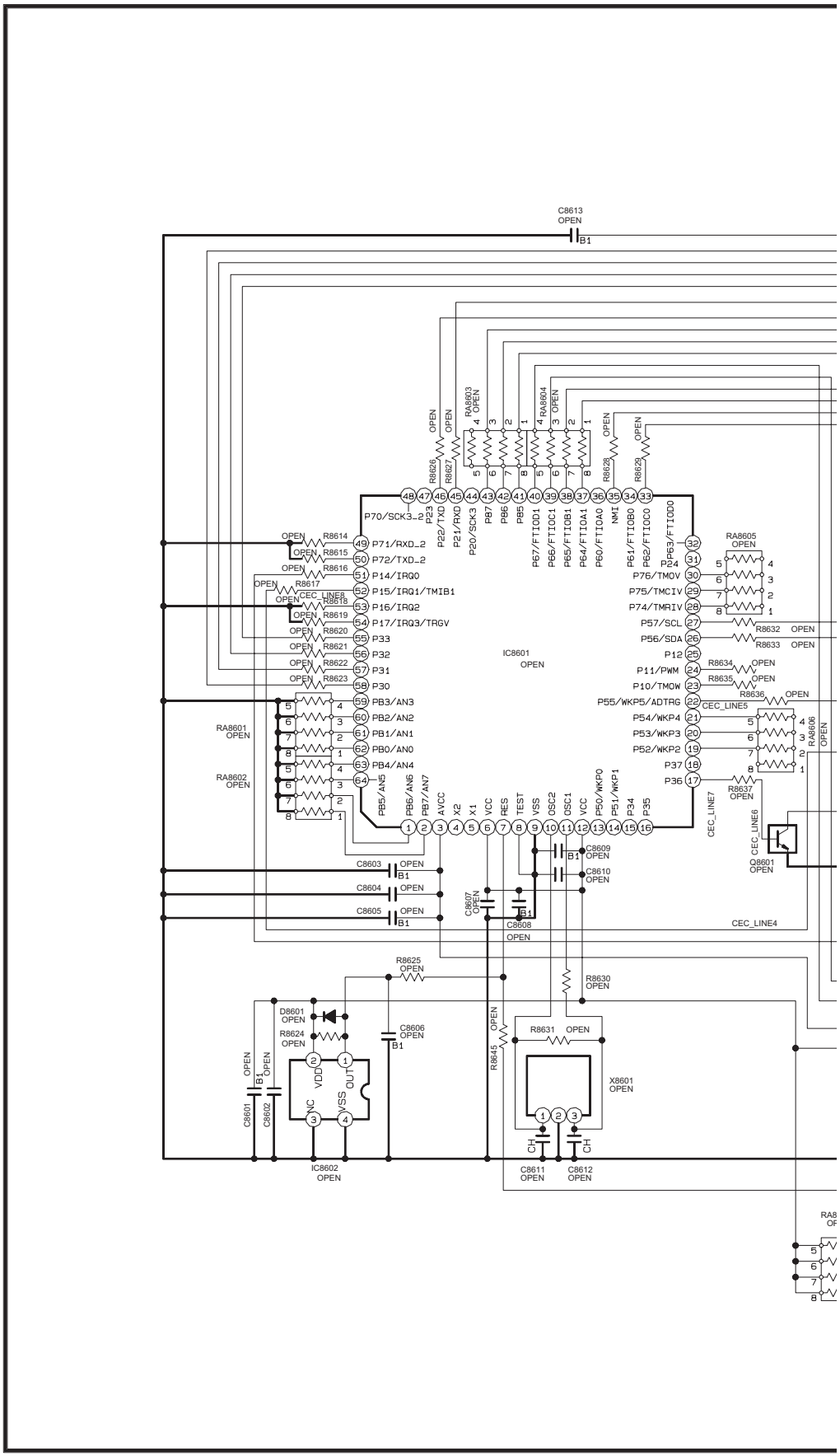
C8613 OPEN B1
IC8601 OPEN
P70/SCK3_2
P71/RXD_2
P72/TXD_2
P14/IRQ0
P15/IRQ1/TMIB1
P16/IRQ2
P17/IRQ3/TRGV
P33
P32
P31
P30
PB3/AN3
PB2/AN2
PB1/AN1
PB0/AN0
PB4/AN4
PB5/AN5
PB6/AN6
PB7/AN7
AVCC
X1
VCC
RES
TEST
VSS
OSC2
OSC1
VCC
P50/WKP0
P51/WKP1
P34
P35
P36
P37
P52/WKP2
P53/WKP3
P54/WKP4
P55/WKP5/ADTRG
P10/TMOW
P11/PWM
P12
P56/SDA
P57/SCL
P74/TMRIV
P75/TMCIV
P76/TMOV
P24
P63/FTIOD0
P62/FTIOC0
P61/FTIOB0
P60/FTIOA0
P64/FTIOA1
P65/FTIOB1
P66/FTIOC1
P67/FTIOD1
PB5
PB6
PB7
P20/SCK3
P21/RXD
P22/TXD
P23
NMI
RA8601 OPEN
RA8602 OPEN
RA8603 OPEN
RA8604 OPEN
RA8605 OPEN
RA8606 OPEN
R8614 OPEN
R8615 OPEN
R8616 OPEN
R8617 OPEN
R8618 OPEN
R8619 OPEN
R8620 OPEN
R8621 OPEN
R8622 OPEN
R8623 OPEN
R8626 OPEN
R8627 OPEN
R8628 OPEN
R8629 OPEN
R8632 OPEN
R8633 OPEN
R8634 OPEN
R8635 OPEN
R8636 OPEN
R8637 OPEN
CEC_LINE8
CEC_LINE5
CEC_LINE7
CEC_LINE6
CEC_LINE4
Q8601 OPEN
C8603 OPEN B1
C8604 OPEN B1
C8605 OPEN B1
C8607 OPEN
C8608 OPEN B1
C8609 OPEN B1
C8610 OPEN
R8625 OPEN
R8630 OPEN
R8631 OPEN
R8645 OPEN
D8601 OPEN
R8624 OPEN
C8606 OPEN B1
C8601 OPEN B1
C8602 OPEN
VDD
OUT
NC
VSS
IC8602 OPEN
X8601 OPEN
C8611 OPEN CH
C8612 OPEN CH

DIGITAL PWB ASS'Y (3/16)
SFL0D178A-M2 [LT-32X667/Z]
SFL0D175A-M2 [LT-32X787/Z]
SFL0D173A-M2 [LT-32X887/Z]

NOTE.
*1:NQR0498-001X
*2:NQR0489-002X
*4:MA111-X
*5:NQR0499-001X
RA0:NRZ0034-0R0W
PNP:2SA1530A/QR/-X
NPN:2SC3928A/QR/-X
L10:NQL79GM-100X
L22:NQL79GM-220X

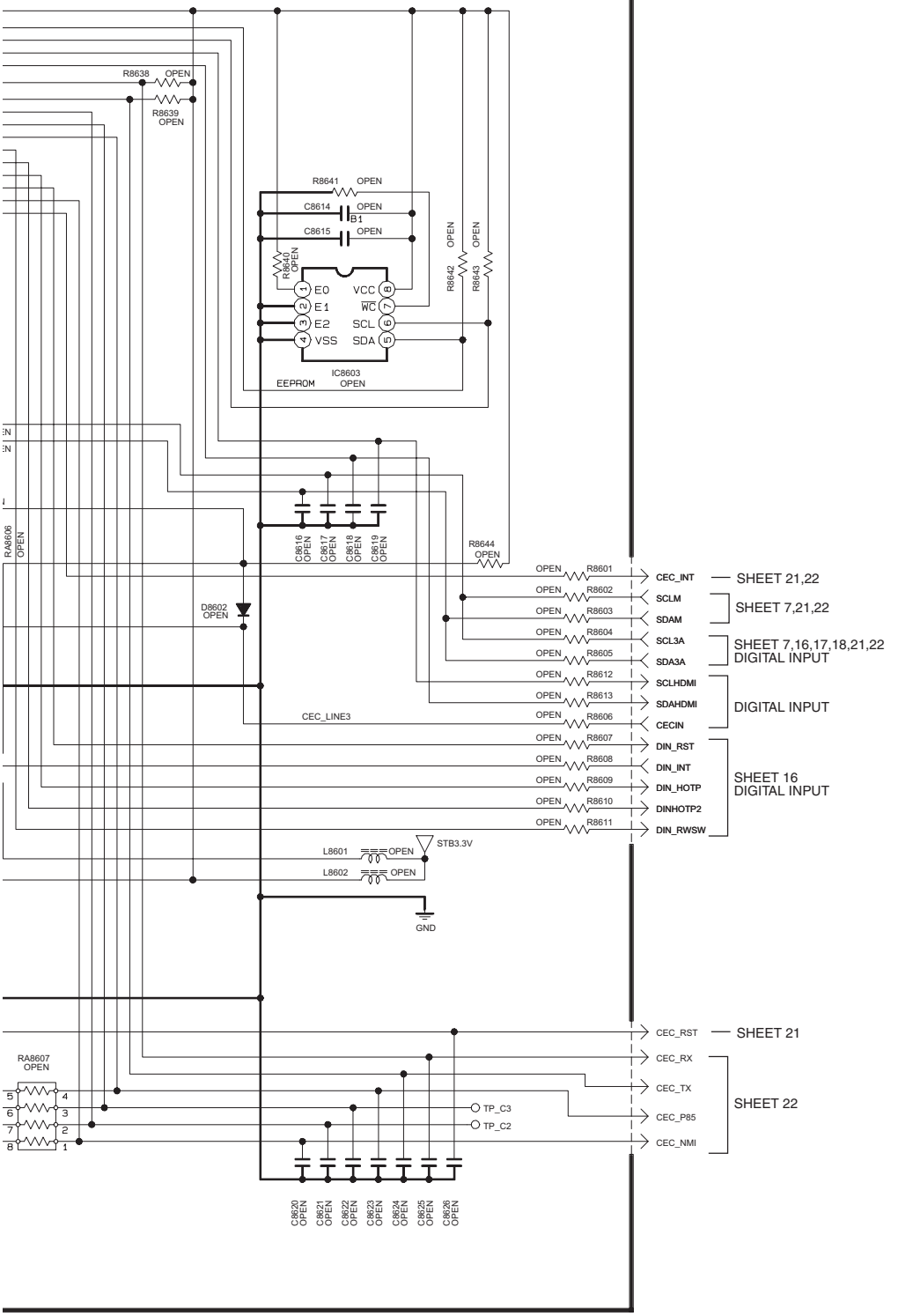

c10463001a014_0425_14/17_0.0

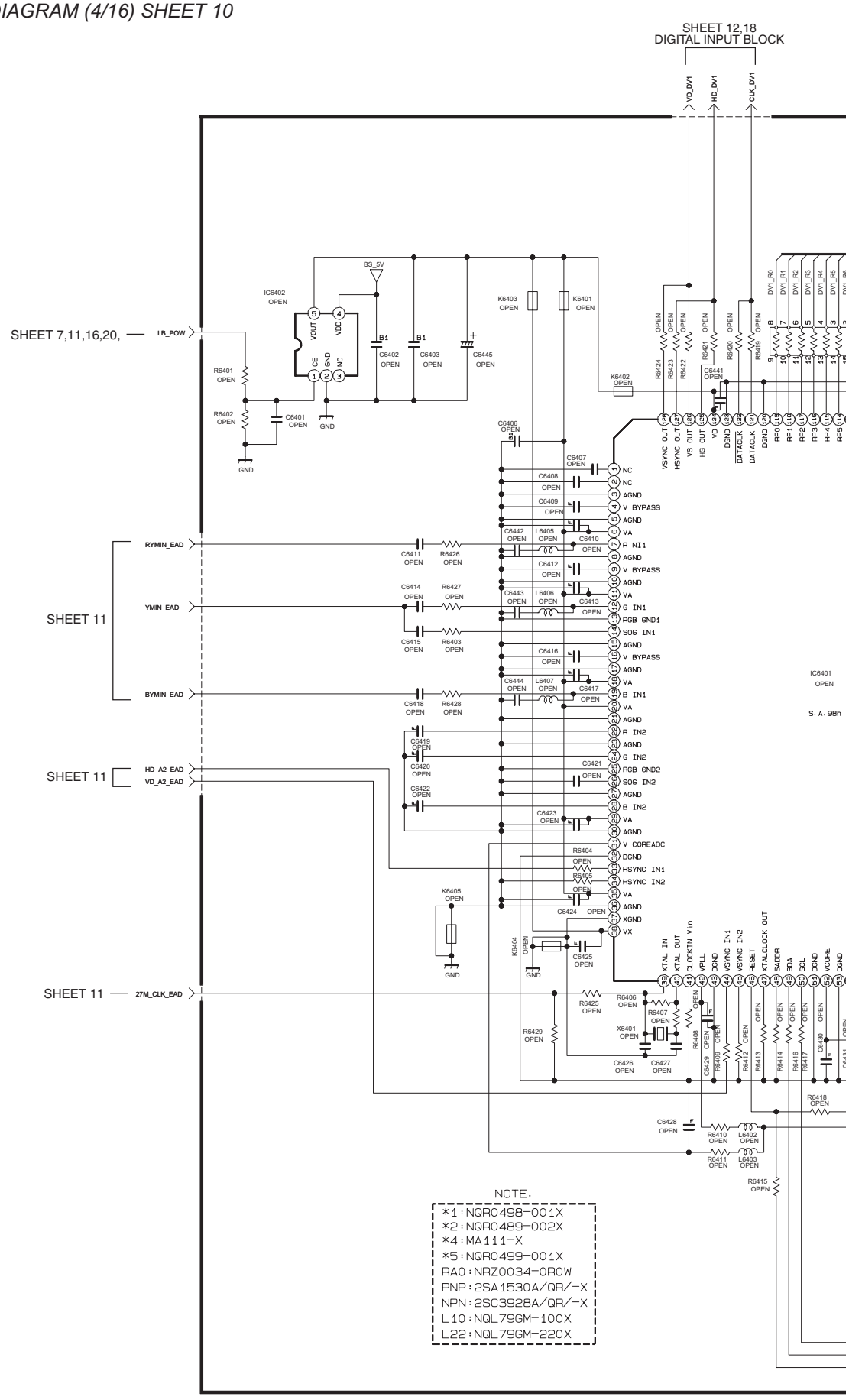
SHEET 12,18
DIGITAL INPUT BLOCK
VD_DV1
HD_DV1
CLK_DV1
SHEET 7,11,16,20,
LB_POW
SHEET 11
RYMIN_EAD
YMIN_EAD
BYMIN_EAD
HD_A2_EAD
VD_A2_EAD
27M_CLK_EAD
IC6402
OPEN
BS_5V
VOUT
VDD
CE
GND
NC
K6403
OPEN
K6401
OPEN
K6402
OPEN
K6405
OPEN
K6404
OPEN
IC6401
OPEN
S.A.98h
NC
AGND
V BYPASS
VA
R IN1
G IN1
RGB GND1
SOG IN1
R IN2
G IN2
RGB GND2
SOG IN2
B IN1
B IN2
V COREADC
DGND
HSYNC IN1
HSYNC IN2
XGND
VX
XTAL IN
XTAL OUT
CLOCKIN Vin
VPLL
RESET
XTALCLOCK OUT
SADDR
SDA
SCL
VCORE
VSYNC OUT
HSYNC OUT
VS OUT
HS OUT
VD
DATACLK
RP0
RP1
RP2
RP3
RP4
RP5
DV1_R0
DV1_R1
DV1_R2
DV1_R3
DV1_R4
DV1_R5
NOTE.
*1:NQR0498-001X
*2:NQR0489-002X
*4:MA111-X
*5:NQR0499-001X
RA0:NRZ0034-0R0W
PNP:2SA1530A/QR/-X
NPN:2SC3928A/QR/-X
L10:NQL79GM-100X
L22:NQL79GM-220X

DIGITAL PWB ASS'Y (4/16)
SFL0D178A-M2 [LT-32X667/Z]
SFL0D175A-M2 [LT-32X787/Z]
SFL0D173A-M2 [LT-32X887/Z]

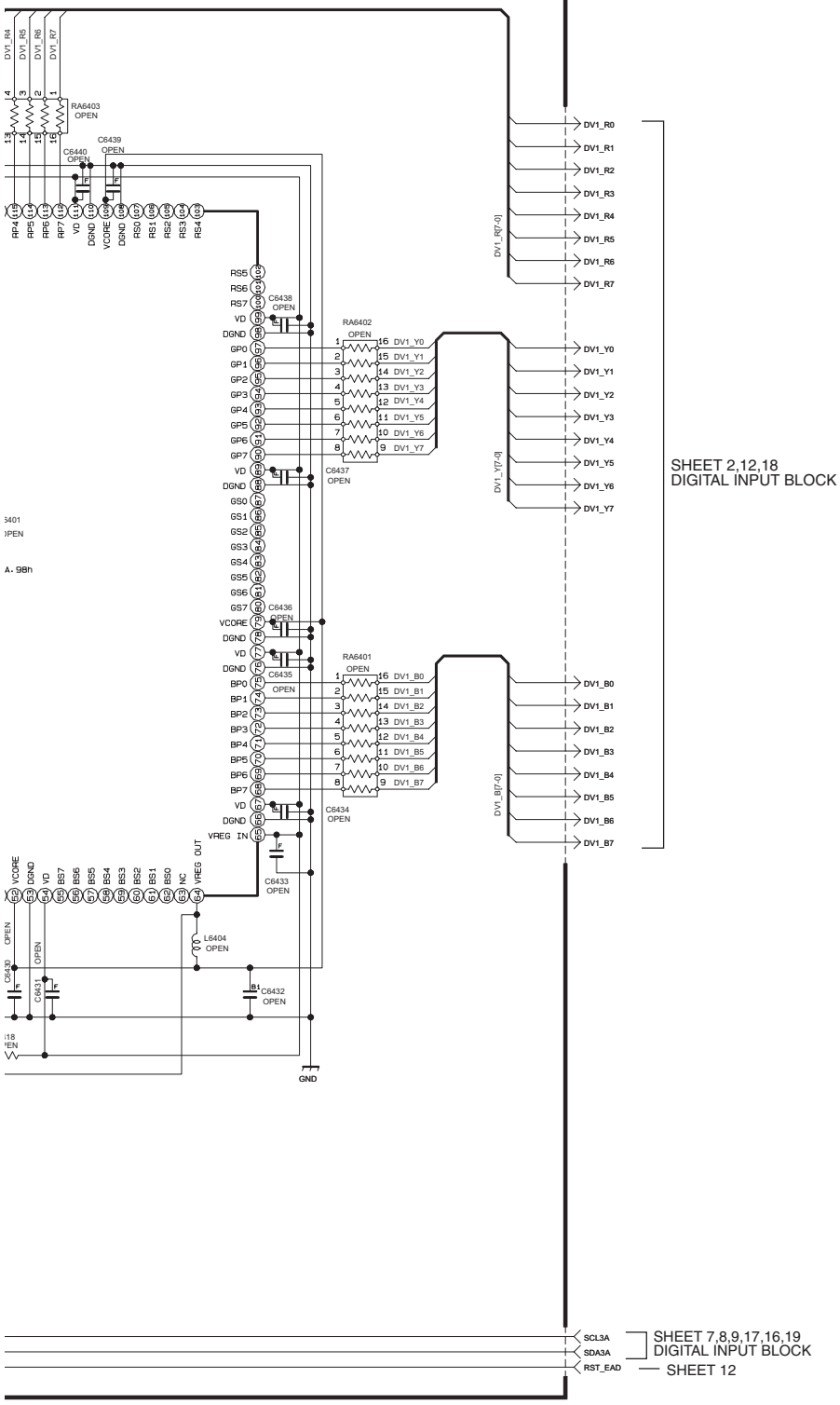

c10463001a017_0425_17/17_0.0

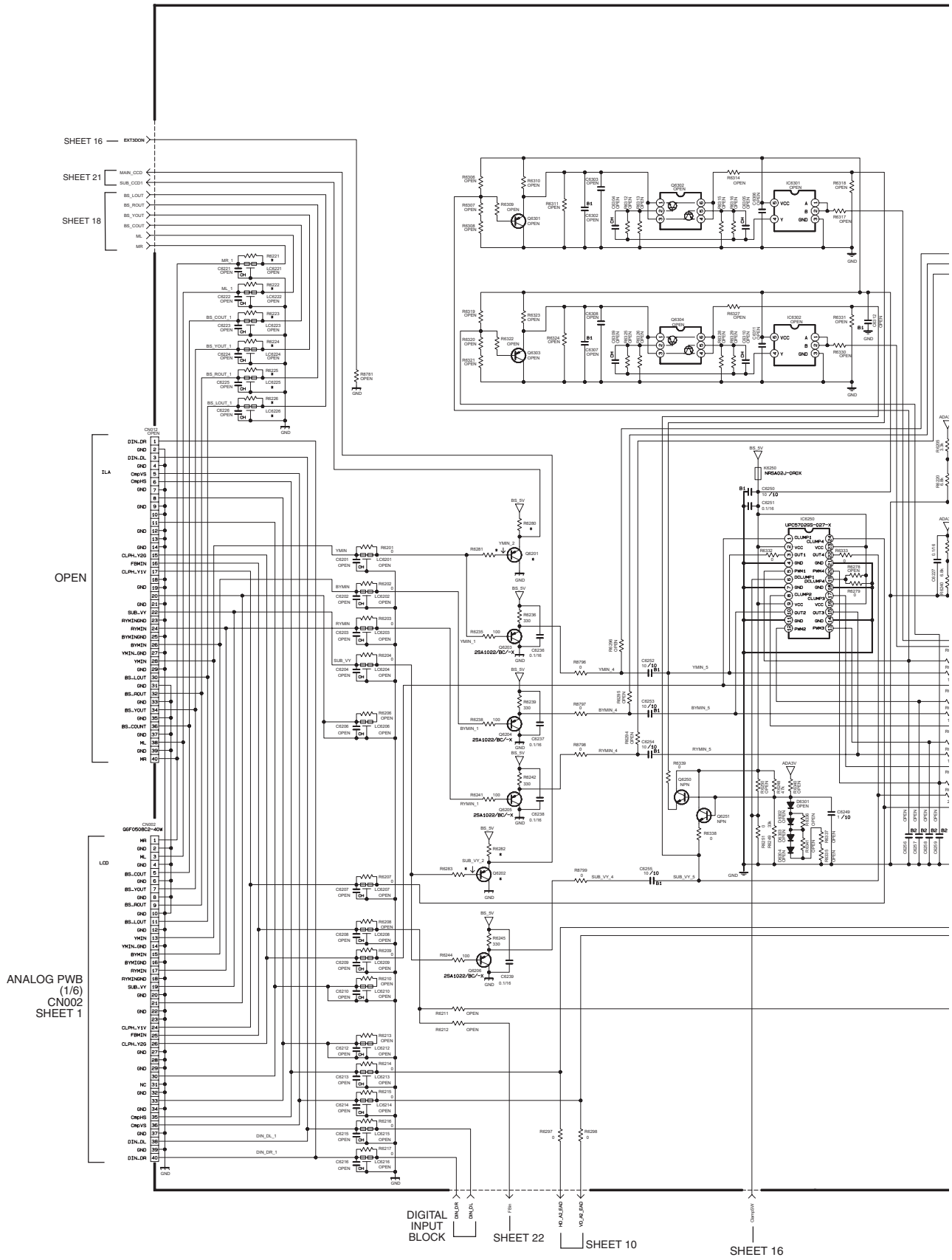
SHEET 16
SHEET 21
SHEET 18
OPEN
ANALOG PWB (1/6) CN002 SHEET 1
DIGITAL INPUT BLOCK
SHEET 22
SHEET 10
SHEET 16

DIGITAL PWB ASS'Y (5/16)
SFL0D178A-M2 [LT-32X667/Z]
SFL0D175A-M2 [LT-32X787/Z]
SFL0D173A-M2 [LT-32X887/Z]

* DIFFERENCE LIST

TYPE	LCD								
	JPN			US					
MODEL	LT-46LH800	LT-37LC85	LT-26LC80	LT-40X887 /X787	LT-37X887 /X787/X667	LT-32X887 X667/X787	LT-32XM57	LT-46FH97 /40FH97	LT-46FH97 /40FH97
ASSY NO.	SFL-00071A	SFL-00072A	SFL-00074A	SFL-00171A etc	SFL-00172A etc	SFL-00173A 175.178A etc	SFL-00180A	SFL-00182A etc	SFL-00184A etc
	QLLC10547	QLLC10547 -02	QLLC10547 -04	QLLC10547 -05 etc	QLLC10547 -06 etc	QLLC10547 -07 etc	QLLC10547 -14	QLLC10547 -16 etc	QLLC10547 -18 etc
Q6201	OPEN	OPEN	OPEN	PNP	PNP	PNP	PNP	PNP	PNP
Q6202	OPEN	OPEN	OPEN	PNP	PNP	PNP	PNP	PNP	PNP
LCG225	OPEN	OPEN	OPEN	OPEN	OPEN	OPEN	OPEN	NQR0470-007X	NQR0470-007X
LCG226	OPEN	OPEN	OPEN	OPEN	OPEN	OPEN	OPEN	NQR0470-007X	NQR0470-007X
R6221	0	0	0	OPEN	OPEN	OPEN	OPEN	OPEN	OPEN
R6222	0	0	0	OPEN	OPEN	OPEN	OPEN	OPEN	OPEN
R6223	0	0	0	OPEN	OPEN	OPEN	OPEN	0	0
R6224	0	0	0	OPEN	OPEN	OPEN	OPEN	0	0
R6225	0	0	0	OPEN	OPEN	OPEN	OPEN	OPEN	OPEN
R6226	0	0	0	OPEN	OPEN	OPEN	OPEN	OPEN	OPEN
R6280	OPEN	OPEN	OPEN	330	330	330	330	330	330
R6281	OPEN	OPEN	OPEN	100	100	100	100	100	100
R6282	OPEN	OPEN	OPEN	330	330	330	330	330	330
R6283	OPEN	OPEN	OPEN	100	100	100	100	100	100

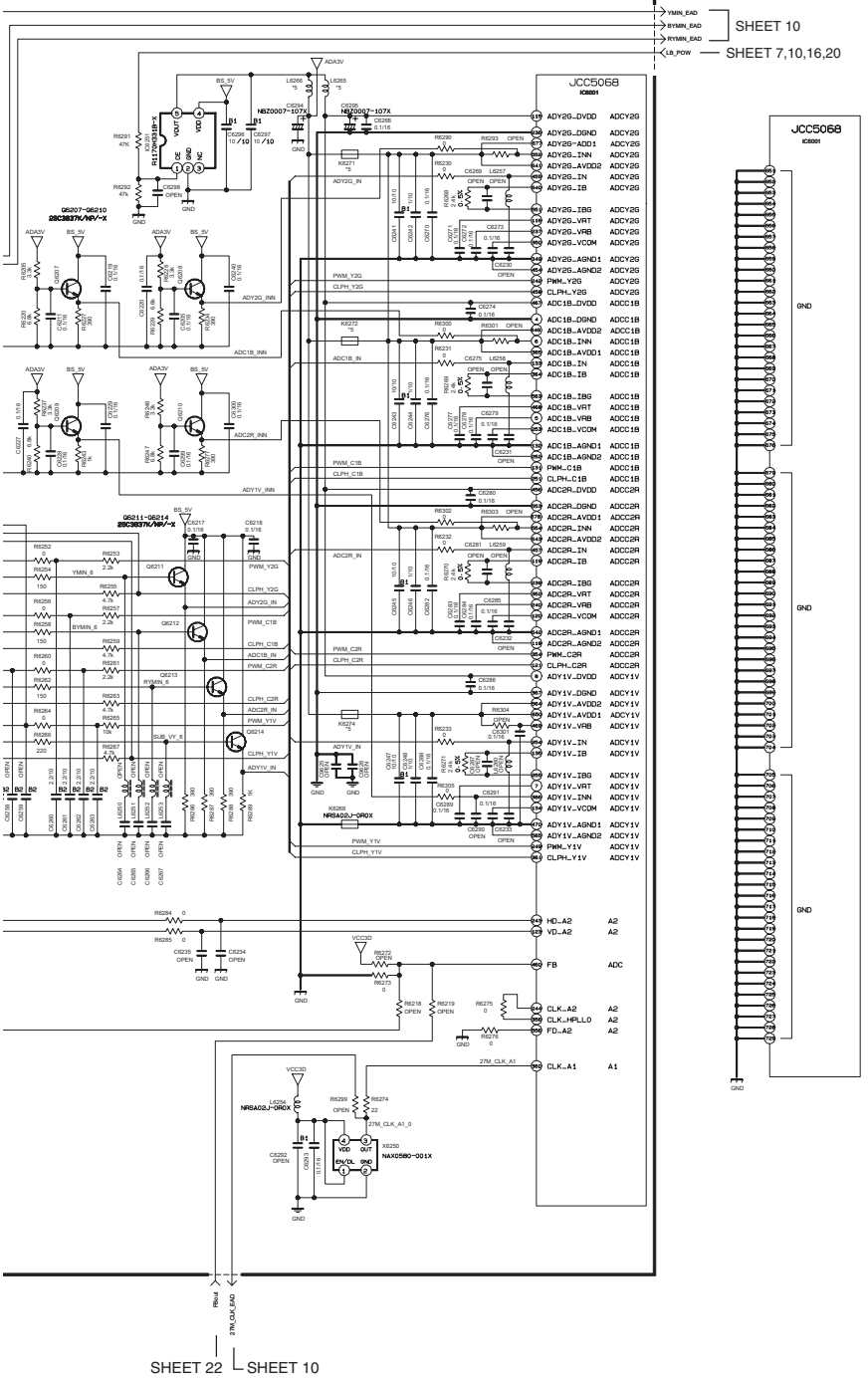

NOTE.
*1:NQR0498-001X
*2:NQR0489-002X
*4:MA111-X
*5:NQR0499-001X
RA0:NRZ0034-0R0W
PNP:2SA1530A/QR/-X
NPN:2SC3928A/QR/-X
L10:NQL79GM-100X
L22:NQL79GM-220X

c10463001a001_0425_1/17_0.0

DIGITAL PWB ASS'Y (6/16)
SFL0D178A-M2 [LT-32X667/Z]
SFL0D175A-M2 [LT-32X787/Z]
SFL0D173A-M2 [LT-32X887/Z]

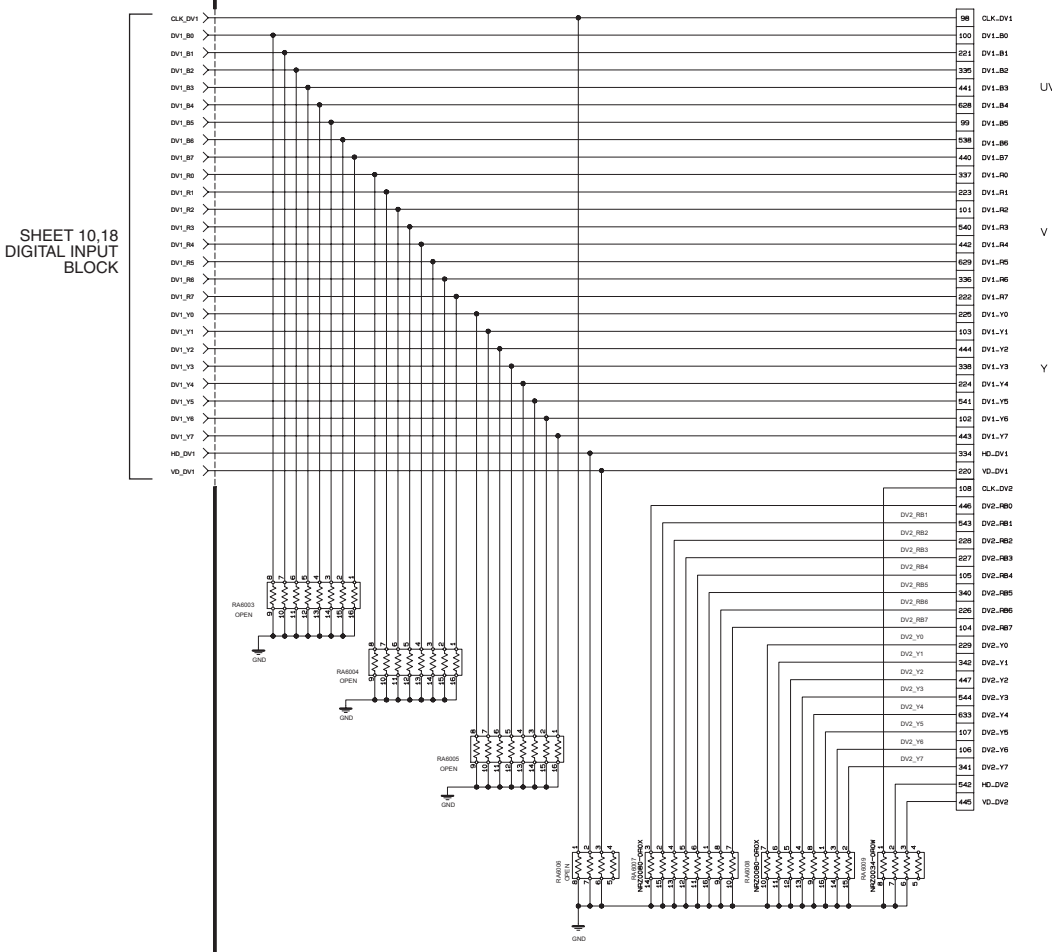

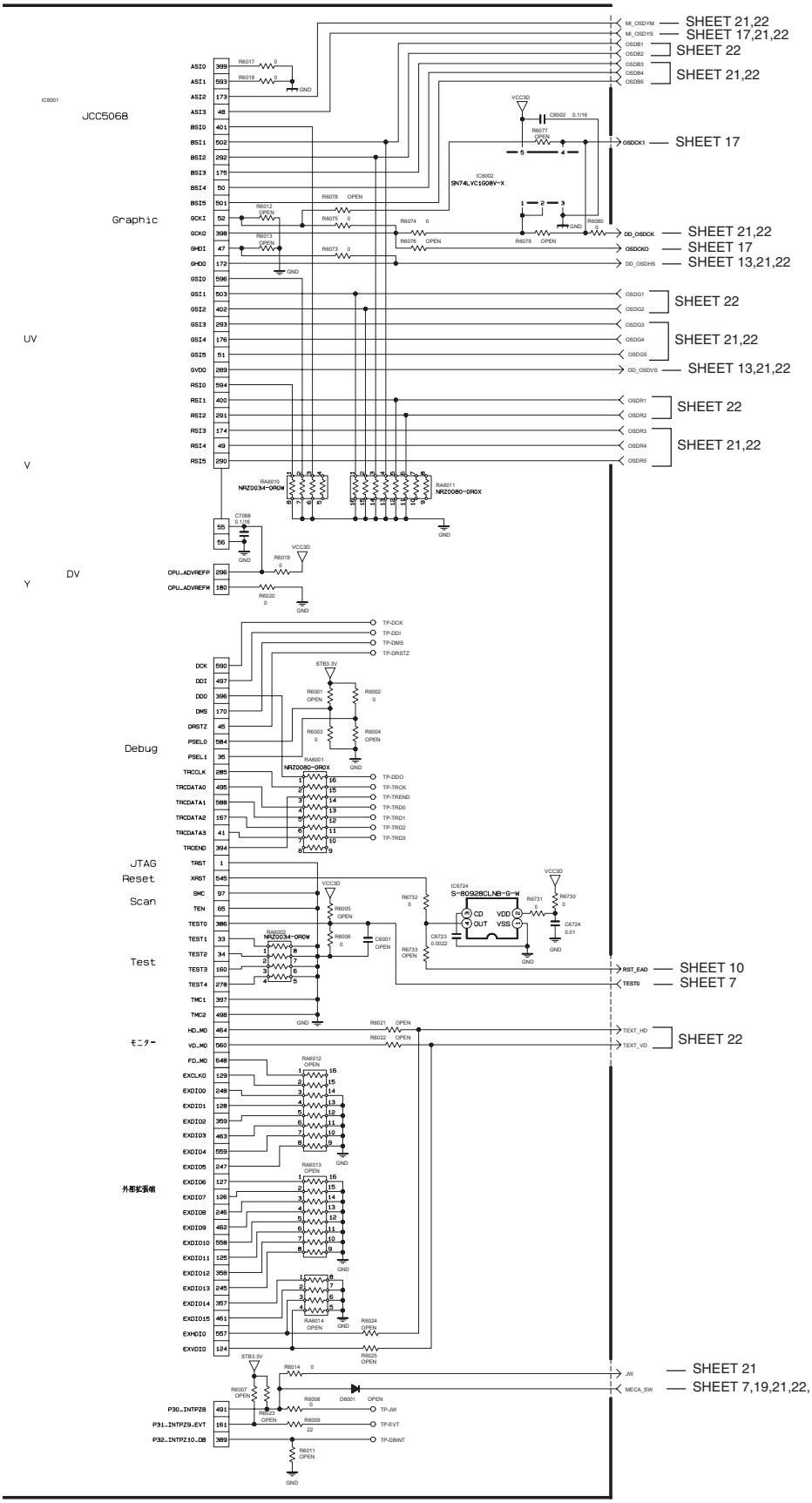

c10463001a002_0425_2/17_0.0

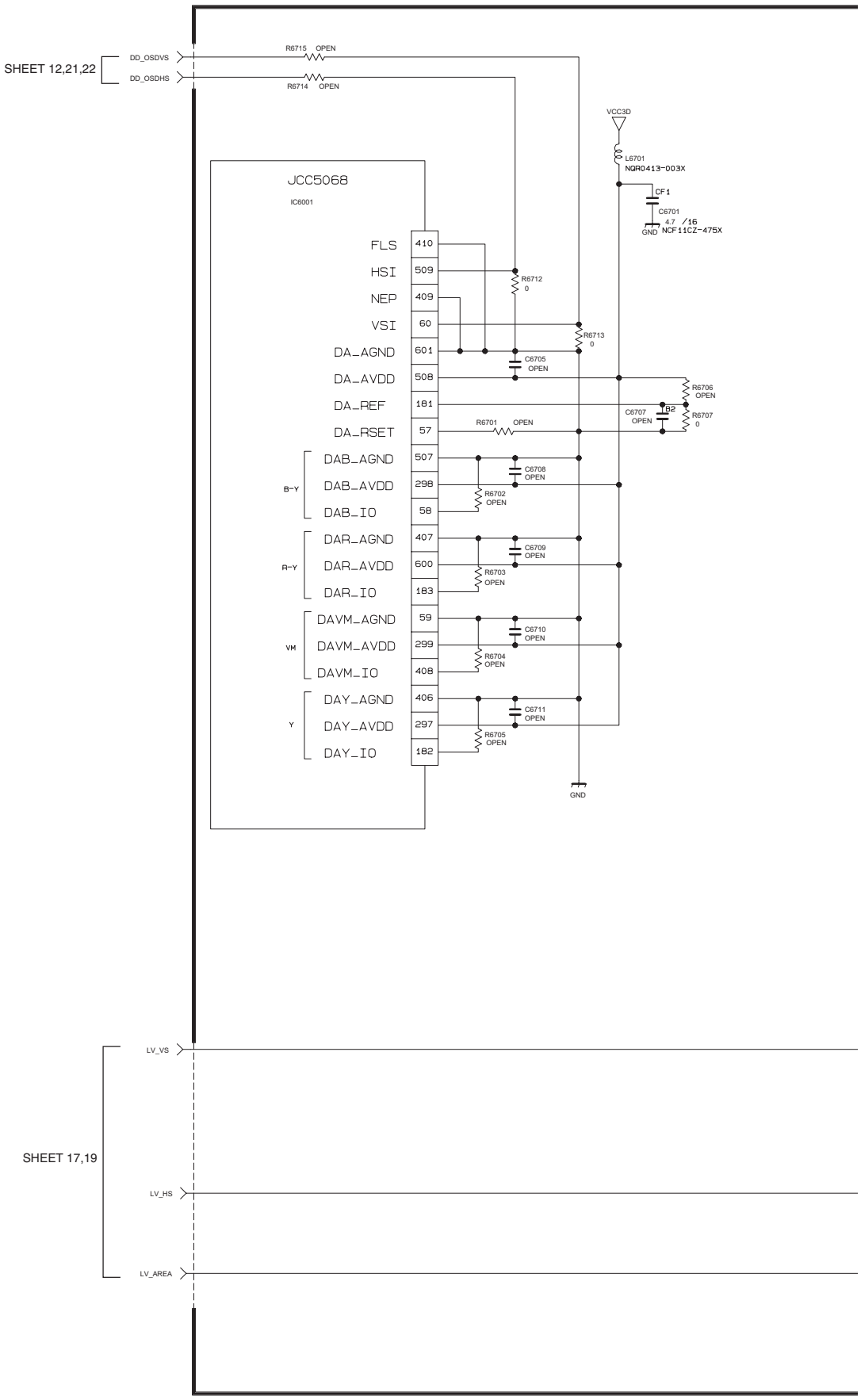
SHEET 12,21,22
DD_OSDVS
DD_OSDHS
R6715 OPEN
R6714 OPEN
VCC3D
L6701
NQR0413-003X
CF1
C6701
4.7 /16
GND NCF11CZ-475X
JCC5068
IC6001
FLS 410
HSI 509
NEP 409
VSI 60
DA_AGND 601
DA_AVDD 508
DA_REF 181
DA_RSET 57
DAB_AGND 507
B-Y
DAB_AVDD 298
DAB_IO 58
DAR_AGND 407
R-Y
DAR_AVDD 600
DAR_IO 183
DAVM_AGND 59
VM
DAVM_AVDD 299
DAVM_IO 408
DAY_AGND 406
Y
DAY_AVDD 297
DAY_IO 182
R6712 0
R6713 0
C6705 OPEN
R6706 OPEN
C6707 OPEN
B2
R6707 0
R6701 OPEN
C6708 OPEN
R6702 OPEN
C6709 OPEN
R6703 OPEN
C6710 OPEN
R6704 OPEN
C6711 OPEN
R6705 OPEN
GND
SHEET 17,19
LV_VS
LV_HS
LV_AREA

DIGITAL PWB ASS'Y (7/16)
SFL0D178A-M2 [LT-32X667/Z]
SFL0D175A-M2 [LT-32X787/Z]
SFL0D173A-M2 [LT-32X887/Z]

NOTE.

*1 : NQR0498-001X
*2 : NQR0489-002X
*4 : MA111-X
*5 : NQR0499-001X
RA0 : NRZ0034-0R0W
PNP : 2SA1530A/QR/-X
NPN : 2SC3928A/QR/-X
L10 : NQL79GM-100X
L22 : NQL79GM-220X

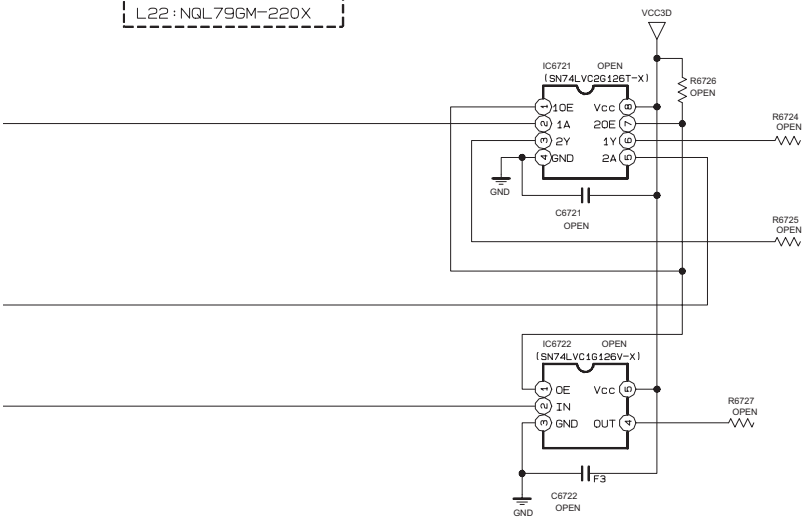

c10463001a005_0425_5/17_0.0

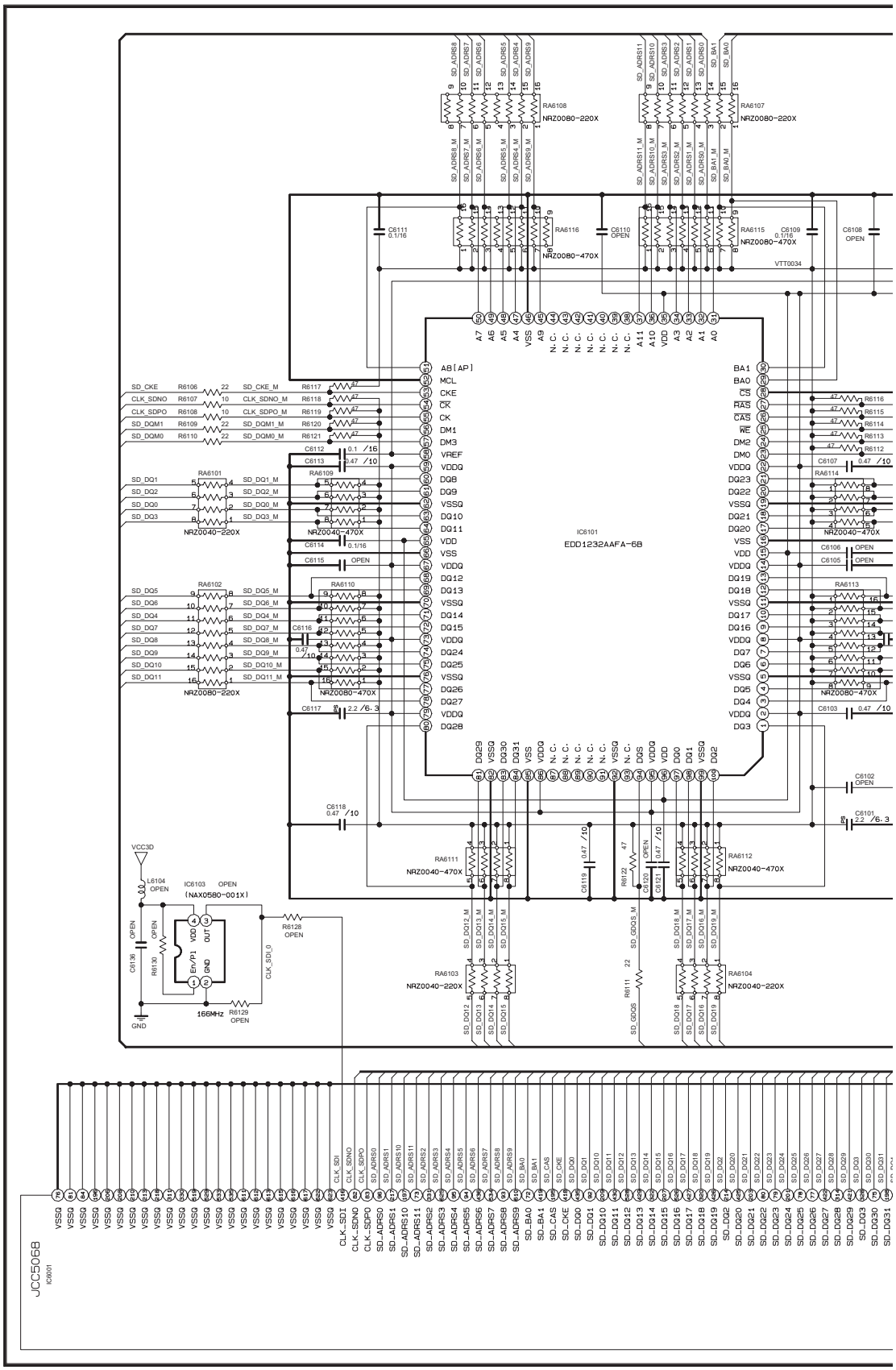
IC6101
EDD1232AAFA-6B
AB[AP]
MCL
CKE
CK
DM1
DM3
VREF
VDDQ
DQ8
DQ9
VSSQ
DQ10
DQ11
VDD
VSS
VDDQ
DQ12
DQ13
VSSQ
DQ14
DQ15
VDDQ
DQ24
DQ25
VSSQ
DQ26
DQ27
VDDQ
DQ28
BA1
BA0
CS
RAS
CAS
WE
DM2
DM0
VDDQ
DQ23
DQ22
VSSQ
DQ21
DQ20
VSS
VDD
VDDQ
DQ19
DQ18
VSSQ
DQ17
DQ16
VDDQ
DQ7
DQ6
VSSQ
DQ5
DQ4
VDDQ
DQ3
A7
A6
A5
A4
VSS
A9
A11
A10
VDD
A3
A2
A1
A0
DQ29
VSSQ
DQ30
DQ31
VSS
VDDQ
DQ5
VDDQ
DQ0
DQ1
VSSQ
DQ2
RA6108
NRZ0080-220X
RA6107
NRZ0080-220X
RA6116
NRZ0080-470X
RA6115
NRZ0080-470X
RA6101
NRZ0040-220X
RA6109
NRZ0040-470X
RA6102
NRZ0080-220X
RA6110
NRZ0080-470X
RA6114
NRZ0040-470X
RA6113
NRZ0080-470X
RA6111
NRZ0040-470X
RA6112
NRZ0040-470X
RA6103
NRZ0040-220X
RA6104
NRZ0040-220X
IC6103 OPEN
(NAX0580-001X)
VCC3D
L6104 OPEN
GND
166MHz
JCC506B
IC6001

DIGITAL PWB ASS'Y (8/16)
SFL0D178A-M2 [LT-32X667/Z]
SFL0D175A-M2 [LT-32X787/Z]
SFL0D173A-M2 [LT-32X887/Z]

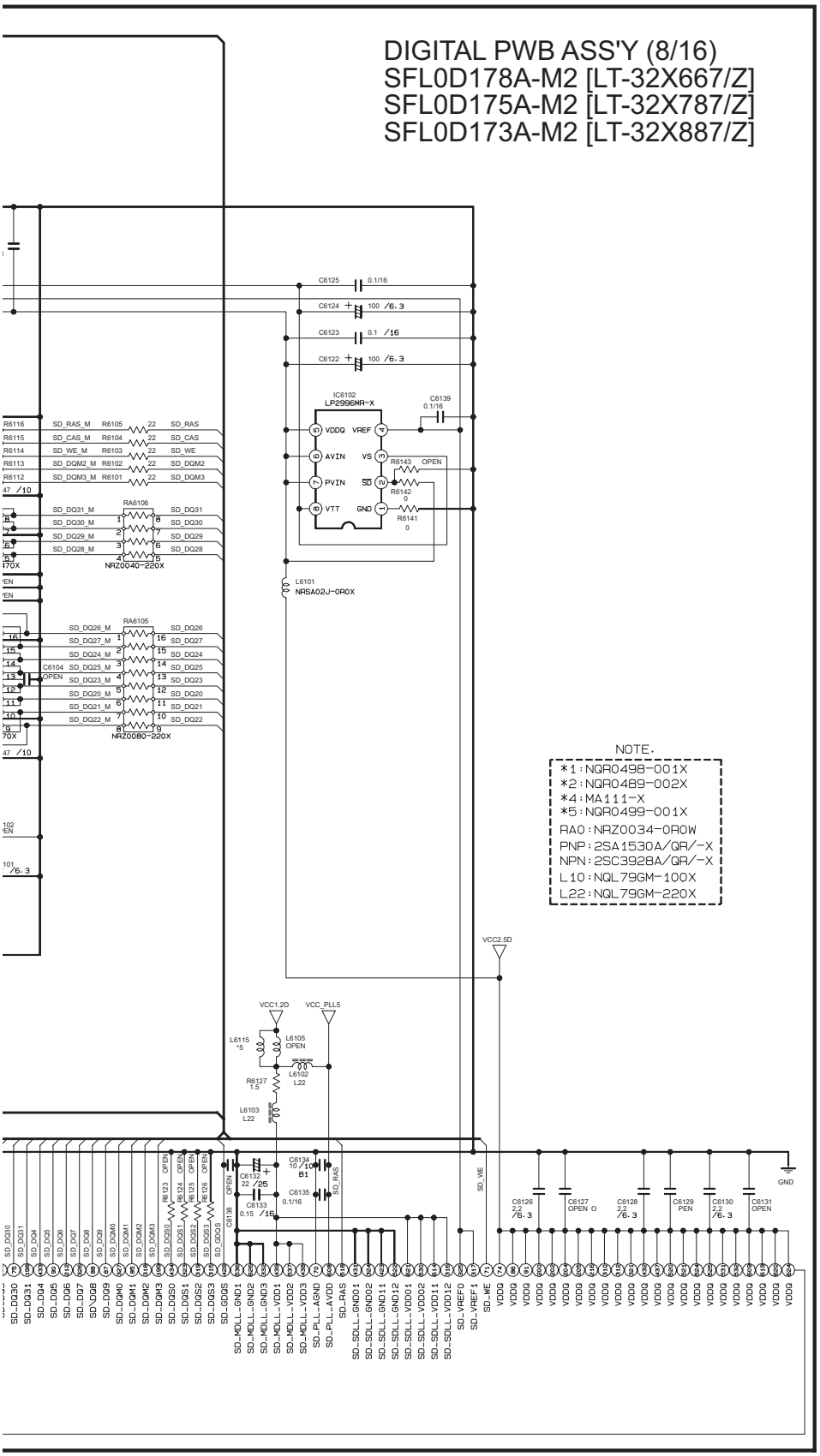

c10463001a003_0425_3/17_0.0

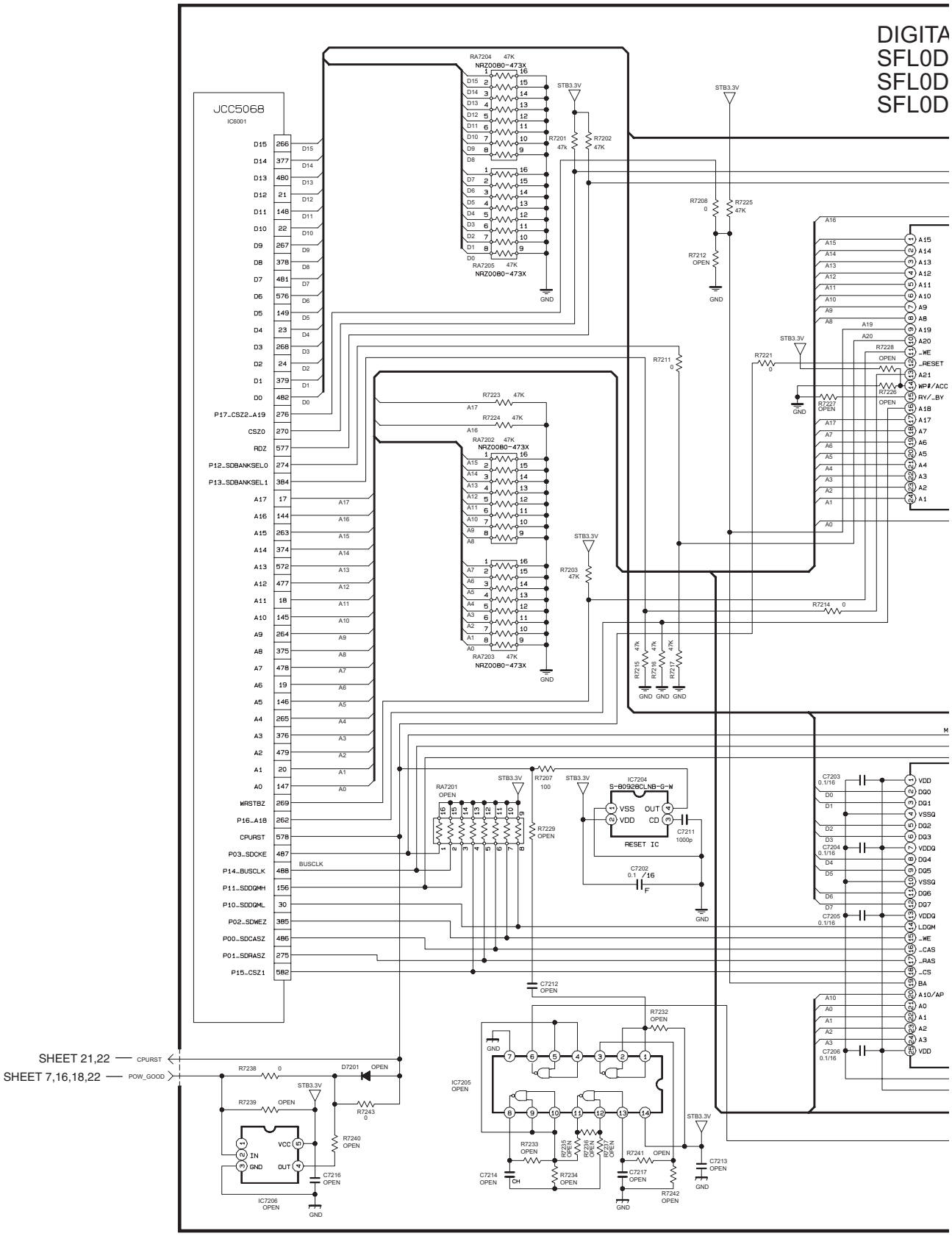
DIGITA
SFL0D
SFL0D
SFL0D
JCC5068
IC6001
RA7204 47K NRZ0080-473X
RA7205 47K NRZ0080-473X
RA7202 47K NRZ0080-473X
RA7203 47K NRZ0080-473X
RA7201 OPEN
STB3.3V
GND
R7201 47K
R7202 47K
R7203 47K
R7207 100
R7208 0
R7211 0
R7212 OPEN
R7214 0
R7215 47K
R7216 47K
R7217 47K
R7221 0
R7223 47K
R7224 47K
R7225 47K
R7226 OPEN
R7227 OPEN
R7228 OPEN
R7229 OPEN
IC7204 S-80928CLNB-G-W
RESET IC
C7202 0.1/16F
C7203 0.1/16
C7204 0.1/16
C7205 0.1/16
C7206 0.1/16
C7211 1000p
C7212 OPEN
C7213 OPEN
C7214 OPEN
C7216 OPEN
C7217 OPEN
IC7205 OPEN
IC7206 OPEN
R7232 OPEN
R7233 OPEN
R7234 OPEN
R7238 0
R7239 OPEN
R7240 OPEN
R7241 OPEN
R7242 OPEN
R7243 0
D7201 OPEN
SHEET 21,22 — CPURST
SHEET 7,16,18,22 — POW_GOOD
BUSCLK
WRSTBZ
P16_A18
CPURST
P03_SDCKE
P14_BUSCLK
P11_SDDQMH
P10_SDDQML
P02_SDWEZ
P00_SDCASZ
P01_SDRASZ
P15_CSZ1
P17_CSZ2_A19
CSZ0
RDZ
P12_SDBANKSEL0
P13_SDBANKSEL1

TAL PWB ASS'Y (9/16)
0D178A-M2 [LT-32X667/Z]
0D175A-M2 [LT-32X787/Z]
0D173A-M2 [LT-32X887/Z]

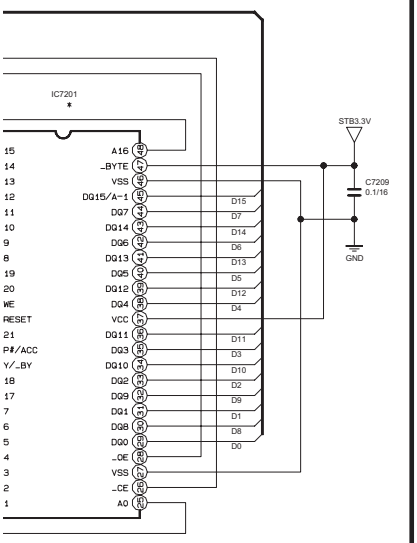

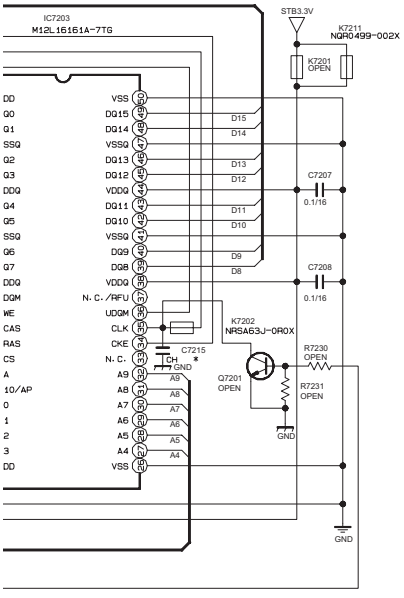

* DIFFERENCE LIST

TYPE	LCD								
	JPN			US					
MODEL	LT-46LH800	LT-37LC85	LT-26LC80	LT-40X887 /X787	LT-37X887 /X787/X667	LT-32X887 X667/X787	LT-32XM57	LT-46FHG7 /40FHG7	LT-46FNG7 /40FNG7
ASSY NO.	SFL-0D071A	SFL-0D072A	SFL-0D074A	SFL-0D171A etc	SFL-0D172A etc	SFL-0D173A 175A,178A etc	SFL-0D180A	SFL-0D182A etc	SFL-0D184A etc
	QLLC10547	QLLC10547 -02	QLLC10547 -04	QLLC10547 -05 etc	QLLC10547 -06 etc	QLLC10547 -07 etc	QLLC10547 -14	QLLC10547 -16 etc	QLLC10547 -18 etc
IC7201	39VF641B7 TEKD05	39VF641B7 TEKD06	39VF641B7 TEKD04	39VF800A7 TEKD80	39VF800A7 TEKD79	39VF800A7 TEKD86	39VF800A7 TEKD86	39VF800A7 TEKD83	39VF800A7 TEKD83
C7215	OPEN	OPEN	OPEN	33p	33p	33p	33p	33p	33p

NOTE.

*1 : NQR0498-001X
*2 : NQR0489-002X
*4 : MA111-X
*5 : NQR0499-001X
RA0 : NRZ0034-0R0W
PNP : 2SA1530A/QR/-X
NPN : 2SC3928A/QR/-X
L10 : NQL79GM-100X
L22 : NQL79GM-220X

c10463001a008_0425_8/17_0.0

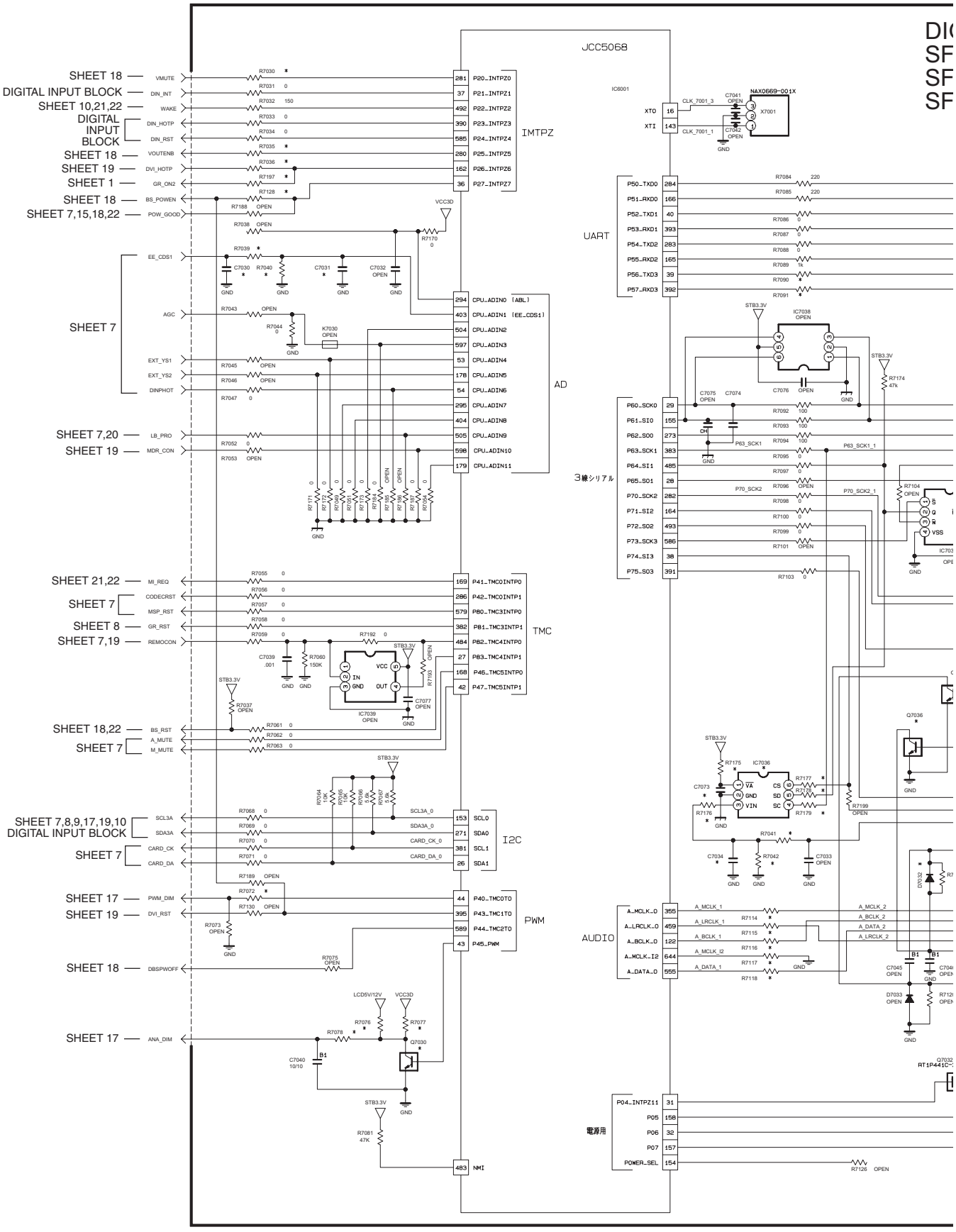
JCC5068
IMTPZ
AD
TMC
I2C
PWM
UART
AUDIO
3線シリアル
電源用
SHEET 18
DIGITAL INPUT BLOCK
SHEET 10,21,22
SHEET 19
SHEET 1
SHEET 7,15,18,22
SHEET 7
SHEET 7,20
SHEET 21,22
SHEET 8
SHEET 7,19
SHEET 18,22
SHEET 7,8,9,17,19,10
SHEET 17
VMUTE
DIN_INT
WAKE
DIN_HOTP
DIN_RST
VOUTENB
DVI_HOTP
GR_ON2
BS_POWEN
POW_GOOD
EE_CDS1
AGC
EXT_YS1
EXT_YS2
DINPHOT
LB_PRO
MDR_CON
MI_REQ
CODECRST
MSP_RST
GR_RST
REMOCON
BS_RST
A_MUTE
M_MUTE
SCL3A
SDA3A
CARD_CK
CARD_DA
PWM_DIM
DVI_RST
DBSPWOFF
ANA_DIM
P20_INTPZ0
P21_INTPZ1
P22_INTPZ2
P23_INTPZ3
P24_INTPZ4
P25_INTPZ5
P26_INTPZ6
P27_INTPZ7
CPU_ADIN0 (ABL)
CPU_ADIN1 (EE_CDS1)
CPU_ADIN2
CPU_ADIN3
CPU_ADIN4
CPU_ADIN5
CPU_ADIN6
CPU_ADIN7
CPU_ADIN8
CPU_ADIN9
CPU_ADIN10
CPU_ADIN11
P41_TMC0INTP0
P42_TMC0INTP1
P80_TMC3INTP0
P81_TMC3INTP1
P82_TMC4INTP0
P83_TMC4INTP1
P46_TMC5INTP0
P47_TMC5INTP1
SCL0
SDA0
SCL1
SDA1
P40_TMC0TO
P43_TMC1TO
P44_TMC2TO
P45_PWM
NMI
P50_TXD0
P51_RXD0
P52_TXD1
P53_RXD1
P54_TXD2
P55_RXD2
P56_TXD3
P57_RXD3
P60_SCK0
P61_SI0
P62_SO0
P63_SCK1
P64_SI1
P65_SO1
P70_SCK2
P71_SI2
P72_SO2
P73_SCK3
P74_SI3
P75_SO3
A_MCLK_0
A_LRCLK_0
A_BCLK_0
A_MCLK_I2
A_DATA_0
P04_INTPZ11
P05
P06
P07
POWER_SEL
XT0
XTI
X7001
IC6001
IC7038
IC7039
IC7036
Q7036
Q7030
STB3.3V
VCC3D
LCD5V/12V
GND

DIGITAL PWB ASS'Y (10/16)
SFL0D178A-M2 [LT-32X667/Z]
SFL0D175A-M2 [LT-32X787/Z]
SFL0D173A-M2 [LT-32X887/Z]

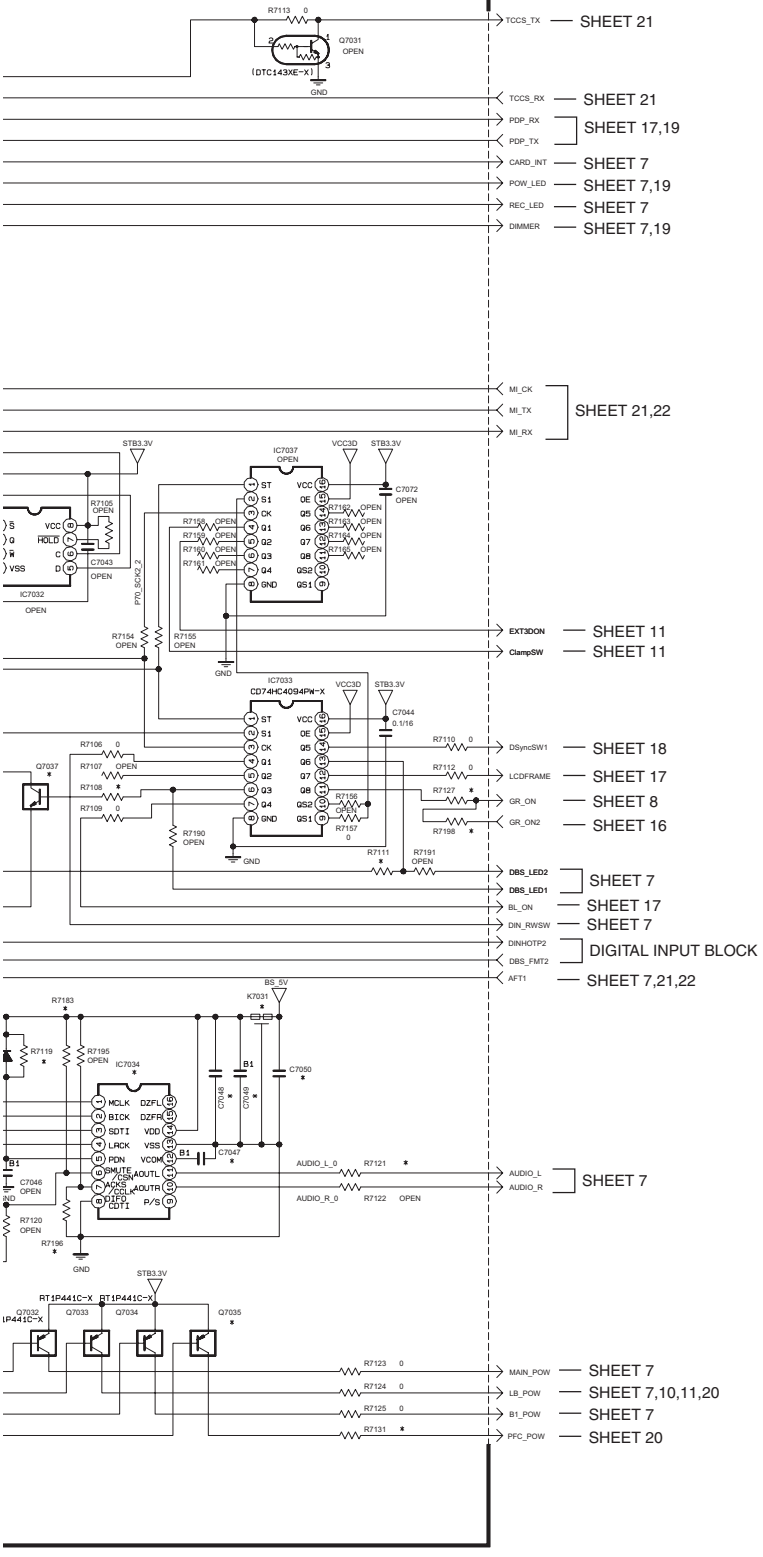

* DIFFERENCE LIST

TYPE	LCD								
	JPN			US					
MODEL	LT-46LH800	LT-37LC85	LT-26LC80	LT-40X887 /X787	LT-37X887 /X787/X667	LT-32X887 X667/X787	LT-32XM57	LT-46FH97 /40FH97	LT-46FN97 /40FN97
ASSY NO.	SFL-0D071A	SFL-0D072A	SFL-0D074A	SFL-0D171A etc	SFL-0D172A etc	SFL-0D173A 175A,178A etc	SFL-0D180A	SFL-0D182A etc	SFL-0D184A etc
	OLLC10547	OLLC10547 -02	OLLC10547 -04	OLLC10547 -05 etc	OLLC10547 -06 etc	OLLC10547 -07 etc	OLLC10547 -14	OLLC10547 -16 etc	OLLC10547 -18 etc
IC7034	AK4384ET-X	AK4384ET-X	AK4384ET-X	OPEN	OPEN	OPEN	OPEN	OPEN	OPEN
IC7036	OPEN	OPEN	OPEN	ADCC@1902A 018-2	ADCC@1902A 018-2	ADCC@1902A 018-2	ADCC@1902A 018-2	ADCC@1902A 018-2	ADCC@1902A 018-2
Q7030	RT1N441C-X	RT1N441C-X	RT1N441C-X	RT1N441C-X	OPEN	OPEN	OPEN	RT1N441C-X	RT1N441C-X
Q7035	RT1P441C-X	RT1P441C-X	OPEN	RT1P441C-X	RT1P441C-X	OPEN	OPEN	RT1P441C-X	RT1P441C-X
Q7036	RT1N441C-X	RT1N441C-X	RT1N441C-X	OPEN	OPEN	OPEN	OPEN	OPEN	OPEN
Q7037	RT1N441C-X	RT1N441C-X	RT1N441C-X	OPEN	OPEN	OPEN	OPEN	OPEN	OPEN
D7032	*4	*4	*4	OPEN	OPEN	OPEN	OPEN	OPEN	OPEN
K7031	NQR0470 -007X	NQR0470 -007X	NQR0470 -007X	OPEN	OPEN	OPEN	OPEN	OPEN	OPEN
R7030	0	0	0	OPEN	OPEN	OPEN	OPEN	0	0
R7035	0	0	0	OPEN	OPEN	OPEN	OPEN	0	0
R7036	OPEN	OPEN	OPEN	0	0	0	0	0	0
R7039	1k	1k	1k	1k	1k	1k	OPEN	1k	1k
R7040	OPEN	OPEN	OPEN	OPEN	OPEN	OPEN	0	OPEN	OPEN
R7041	OPEN	OPEN	OPEN	22k	22k	22k	22k	22k	22k
R7042	OPEN	OPEN	OPEN	33k	33k	33k	33k	OPEN	OPEN
R7070	0	0	0	0	0	0	OPEN	0	0
R7071	0	0	0	0	0	OPEN	OPEN	0	0
R7072	OPEN	OPEN	OPEN	0	0	0	0	OPEN	OPEN
R7076	OPEN	470	OPEN	OPEN	OPEN	OPEN	OPEN	OPEN	OPEN
R7077	330	OPEN	470	470	1k	1k	1k	330	330
R7078	330	1k	1k	330	0	0	0	330	330
R7090	0	0	0	OPEN	OPEN	OPEN	OPEN	0	0
R7091	OPEN	OPEN	OPEN	0	0	0 0		0	0
R7108	0	0	0	OPEN	OPEN	OPEN	OPEN	OPEN	OPEN
R7110	0	0	0	OPEN	OPEN	OPEN	OPEN	0	0
R7111	0	0	0	OPEN	OPEN	OPEN	OPEN	OPEN	OPEN
R7114	0	0	0	OPEN	OPEN	OPEN	OPEN	OPEN	OPEN
R7115	0	0	0	OPEN	OPEN	OPEN	OPEN	OPEN	OPEN
R7116	0	0	0	OPEN	OPEN	OPEN	OPEN	OPEN	OPEN
R7117	0	0	0	OPEN	OPEN	OPEN	OPEN	OPEN	OPEN
R7118	0	0	0	OPEN	OPEN	OPEN	OPEN	OPEN	OPEN
R7119	1k	1k	1k	OPEN	OPEN	OPEN	OPEN	OPEN	OPEN
R7121	100	100	100	OPEN	OPEN	OPEN	OPEN	OPEN	OPEN
R7127	OPEN	OPEN	OPEN	0	0	0 0	0		0
R7128	0	0	0	OPEN	OPEN	OPEN	OPEN	0	0
R7131	0	0	OPEN	0	0	OPEN	OPEN	0	0
R7175	OPEN	OPEN	OPEN	0	0	0	0	0	0
R7176	OPEN	OPEN	OPEN	0	0	0	0	0	0
R7177	OPEN	OPEN	OPEN	0	0	0	0	0	0
R7178	OPEN	OPEN	OPEN	0	0	0	0	0	0
R7179	OPEN	OPEN	OPEN	0	0	0	0	0	0
R7183	1k	1k	1k	OPEN	OPEN	OPEN	OPEN	OPEN	OPEN
R7196	0	0	0	OPEN	OPEN	OPEN	OPEN	OPEN	OPEN
R7197	0	0	0	OPEN	OPEN	OPEN	OPEN	OPEN	OPEN
R7198	0	0	0	OPEN	OPEN	OPEN	OPEN	OPEN	OPEN
C7030	0.01/50	0.01/50	0.01/50	0.01/50	0.01/50	0.01/50	OPEN	0.01/50	0.01/50
C7031	0.01/50	0.01/50	0.01/50	0.01/50	0.01/50	0.01/50	OPEN	0.01/50	0.01/50
C7034	OPEN	OPEN	OPEN	0.015/16	0.015/16	0.015/16	0.015/16	OPEN	OPEN
C7047	10/10	10/10	10/10	OPEN	OPEN	OPEN	OPEN	OPEN	OPEN
C7048	0.1/16	0.1/16	0.1/16	OPEN	OPEN	OPEN	OPEN	OPEN	OPEN
C7049	10/10	10/10	10/10	OPEN	OPEN	OPEN	OPEN	OPEN	OPEN
C7050	0.1/16	0.1/16	0.1/16	OPEN	OPEN	OPEN	OPEN	OPEN	OPEN
C7073	OPEN	OPEN	OPEN	0.1/16	0.1/16	0.1/16	0.1/16	0.1/16	0.1/16

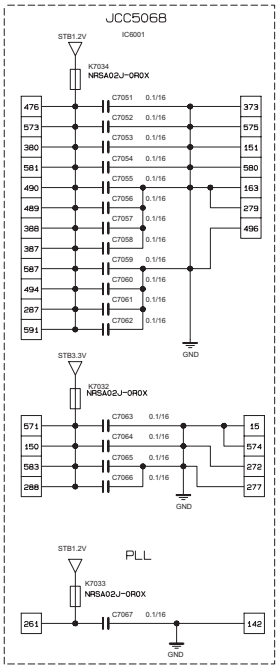

NOTE.
- *1 : NQR0498-001X
- *2 : NQR0489-002X
- *4 : MA111-X
- *5 : NQR0499-001X
- RA0 : NRZ0034-0R0W
- PNP : 2SA1530A/QR/-X
- NPN : 2SC3928A/QR/-X
- L10 : NQL79GM-100X
- L22 : NQL79GM-220X

c10463001a009_0425_9/17_0.0

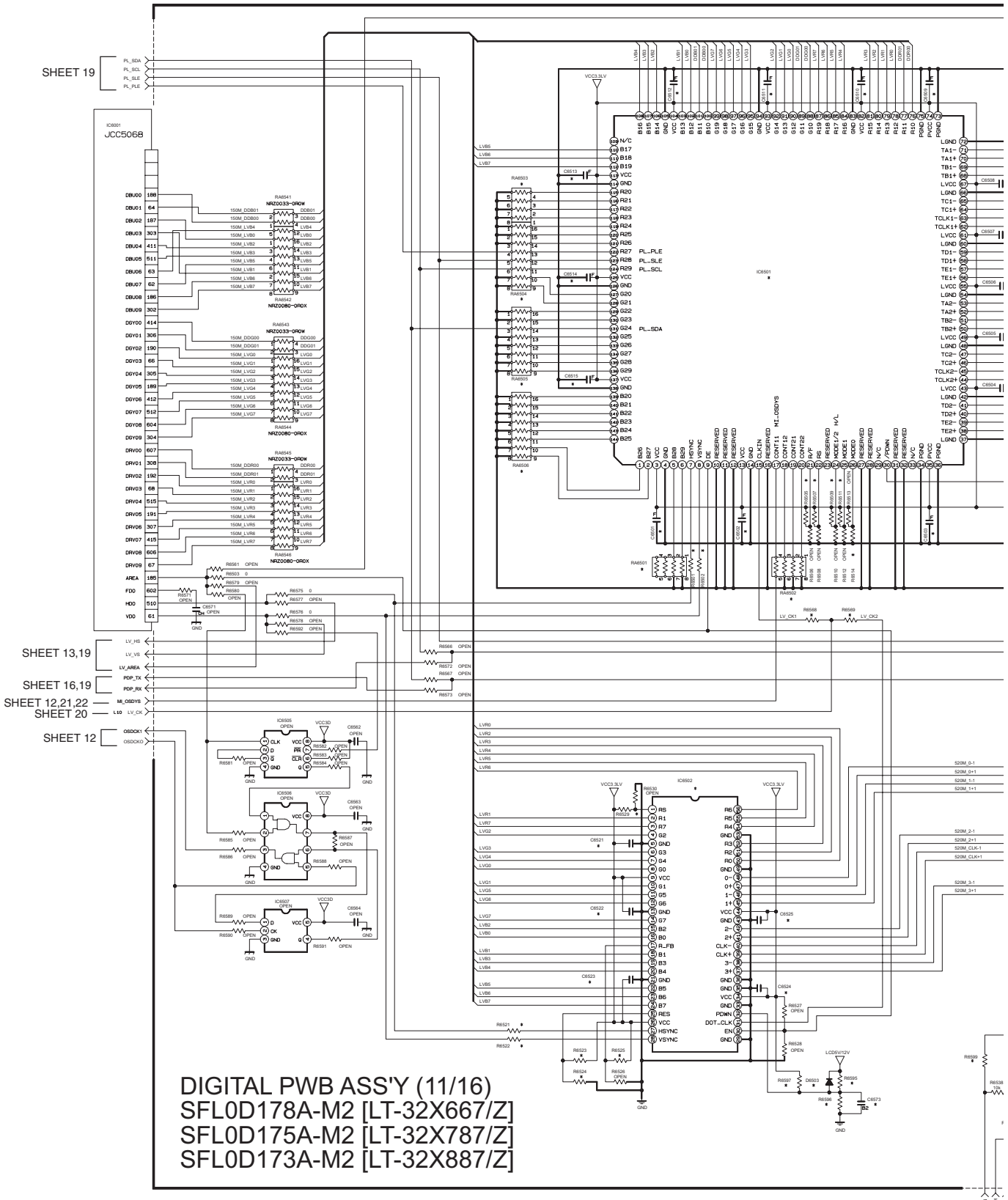
SHEET 19
SHEET 13,19
SHEET 16,19
SHEET 12,21,22
SHEET 20
SHEET 12
IC6001
JCC5068
IC6501
IC6502
IC6505
IC6506
IC6507
DIGITAL PWB ASS'Y (11/16)
SFL0D178A-M2 [LT-32X667/Z]
SFL0D175A-M2 [LT-32X787/Z]
SFL0D173A-M2 [LT-32X887/Z]

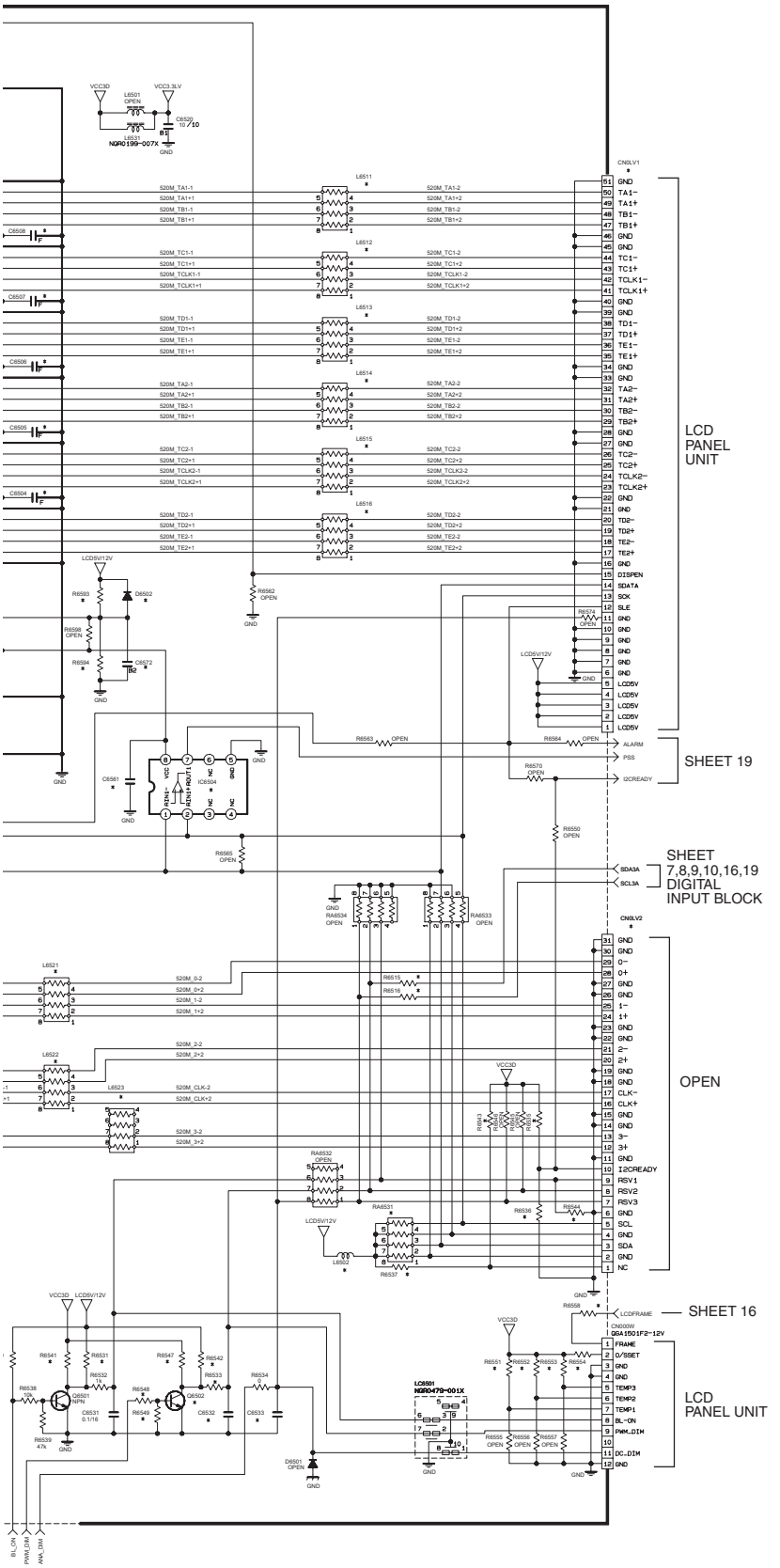

* DIFFERENCE LIST

TYPE	LCD								
	JPN			US					
MODEL	LT-46LH800	LT-37LC85	LT-26LC80	LT-40X887 /X787	LT-37X887 /X787/X667	LT-32X887 X667/X787	LT-32XM57	LT-46FH97 /40FH97	LT-46FN97 /40FN97
ASSY NO.	SFL-00071A	SFL-00072A	SFL-00074A	SFL-00171A etc	SFL-00172A etc	SFL-00173A 175A,176A etc	SFL-00180A	SFL-00182A etc	SFL-00184A etc
	QLLC10547	QLLC10547 -02	QLLC10547 -04	QLLC10547 -05 etc	QLLC10547 -06 etc	QLLC10547 -07 etc	QLLC10547 -14	QLLC10547 -16 etc	QLLC10547 -18 etc
CN6LV1	QGA0504F1 -SIX	OPEN	OPEN	OPEN	OPEN	OPEN	OPEN	QGA0504F1 -SIX	QGA0504F1 -SIX
CN6LV2	OPEN	QGA0504F1 -SIX	QGA0504F1 -SIX	QGA0504F1 -SIX	QGA0504F1 -SIX	QGA0504F1 -SIX	QGA0504F1 -SIX	OPEN	OPEN
IC6501	THC63LV0 1D23	THC63LV0 1D23-W	THC63LV0 1D23-W	THC63LV0 1D23-W	THC63LV0 1D23-W	THC63LV0 1D23-W	THC63LV0 1D23-W	THC63LV0 1D23	THC63LV0 1D23
IC6502	OPEN	THC63LV0 1D23-W	THC63LV0 1D23-W	THC63LV0 1D23-W	THC63LV0 1D23-W	THC63LV0 1D23-W	THC63LV0 1D23-W	OPEN	OPEN
Q6502	OPEN	OPEN	OPEN	NPN	NPN	NPN	NPN	OPEN	OPEN
D6502	*4	OPEN	OPEN	OPEN	OPEN	OPEN	OPEN	*4	*4
D6503	OPEN	OPEN	*4	*4	*4	*4	*4	OPEN	OPEN
L6502	OPEN	NRSA02J -2R2X	NRSA02J -2R2X	NRSA02J -2R2X	NRSA02J -2R2X	NRSA02J -2R2X	NRSA02J -2R2X	OPEN	OPEN
L6511	RA0	OPEN	OPEN	OPEN	OPEN	OPEN	OPEN	RA0	RA0
L6512	RA0	OPEN	OPEN	OPEN	OPEN	OPEN	OPEN	RA0	RA0
L6513	RA0	OPEN	OPEN	OPEN	OPEN	OPEN	OPEN	RA0	RA0
L6514	RA0	OPEN	OPEN	OPEN	OPEN	OPEN	OPEN	RA0	RA0
L6515	RA0	OPEN	OPEN	OPEN	OPEN	OPEN	OPEN	RA0	RA0
L6516	RA0	OPEN	OPEN	OPEN	OPEN	OPEN	OPEN	RA0	RA0
L6521	OPEN	RA0	RA0	RA0	RA0	RA0	RA0	OPEN	OPEN
L6522	OPEN	RA0	RA0	RA0	RA0	RA0	RA0	OPEN	OPEN
L6523	OPEN	RA0	RA0	RA0	RA0	RA0	RA0	OPEN	OPEN
RA6501	RA0	OPEN	OPEN	OPEN	OPEN	OPEN	OPEN	RA0	RA0
RA6502	RA0	OPEN	OPEN	OPEN	OPEN	OPEN	OPEN	RA0	RA0
RA6503	RA0	OPEN	OPEN	OPEN	OPEN	OPEN	OPEN	RA0	RA0
RA6504	NRZ008Q -0R0X	OPEN	OPEN	OPEN	OPEN	OPEN	OPEN	NRZ008Q -0R0X	NRZ008Q -0R0X
RA6505	NRZ008Q -0R0X	OPEN	OPEN	OPEN	OPEN	OPEN	OPEN	NRZ008Q -0R0X	NRZ008Q -0R0X
RA6506	NRZ008Q -0R0X	OPEN	OPEN	OPEN	OPEN	OPEN	OPEN	NRZ008Q -0R0X	NRZ008Q -0R0X
RA6531	OPEN	RA0	RA0	RA0	RA0	RA0	RA0	OPEN	OPEN
R6501	100	OPEN	OPEN	OPEN	OPEN	OPEN	OPEN	100	100
R6502	100	OPEN	OPEN	OPEN	OPEN	OPEN	OPEN	100	100
R6505	1K	OPEN	OPEN	OPEN	OPEN	OPEN	OPEN	1K	1K
R6507	1K	OPEN	OPEN	OPEN	OPEN	OPEN	OPEN	1K	1K
R6509	1K	OPEN	OPEN	OPEN	OPEN	OPEN	OPEN	1K	1K
R6511	1K	OPEN	OPEN	OPEN	OPEN	OPEN	OPEN	1K	1K
R6514	0	OPEN	OPEN	OPEN	OPEN	OPEN	OPEN	0	0
R6515	OPEN	0	OPEN	OPEN	OPEN	OPEN	OPEN	OPEN	OPEN
R6516	OPEN	0	OPEN	OPEN	OPEN	OPEN	OPEN	OPEN	OPEN
R6521	OPEN	100	100	100	100	100	100	OPEN	OPEN
R6522	OPEN	100	100	100	100	100	100	OPEN	OPEN
R6523	OPEN	1K	1K	1K	1K	1K	1K	OPEN	OPEN
R6524	OPEN	1K	1K	1K	1K	1K	1K	OPEN	OPEN
R6525	OPEN	0	0	0	0	0	0	OPEN	OPEN
R6529	OPEN	0	0	0	0	0	0	OPEN	OPEN
R6531	OPEN	1K	OPEN	1K	OPEN	OPEN	OPEN	OPEN	OPEN
R6533	OPEN	0	OPEN	0	0	0	0	OPEN	OPEN
R6535	OPEN	OPEN	1k	OPEN	1K	1K	1K	OPEN	OPEN
R6536	OPEN	0	OPEN	0	OPEN	OPEN	OPEN	OPEN	OPEN
R6537	OPEN	OPEN	0	0	0	0	0	OPEN	OPEN
R6541	1k	OPEN	1k	OPEN	1k	1k	1k	1k	1k
R6542	OPEN	0	OPEN	1k	OPEN	OPEN	OPEN	OPEN	OPEN
R6543	OPEN	0	OPEN	OPEN	OPEN	OPEN	OPEN	OPEN	OPEN
R6544	OPEN	0	OPEN	OPEN	OPEN	OPEN	OPEN	OPEN	OPEN
R6547	OPEN	OPEN	OPEN	OPEN	1k	1k	1k	OPEN	OPEN
R6548	OPEN	OPEN	OPEN	1k	10k	10k	10k	OPEN	OPEN
R6549	OPEN	OPEN	OPEN	OPEN	10k	10k	10k	OPEN	OPEN
R6551	1K	1K	OPEN	OPEN	OPEN	OPEN	OPEN	1K	1K
R6552	1K	1K	OPEN	OPEN	OPEN	OPEN	OPEN	1K	1K
R6553	1K	1K	OPEN	OPEN	OPEN	OPEN	OPEN	1K	1K
R6554	0	0	OPEN	OPEN	OPEN	OPEN	OPEN	0	0
R6558	1K	1K	OPEN	OPEN	OPEN	OPEN	OPEN	1K	1K
R6568	0	OPEN	OPEN	OPEN	OPEN	OPEN	OPEN	0	0
R6569	OPEN	0	0	0	0	0	0	OPEN	OPEN
R6593	18k	OPEN	OPEN	OPEN	OPEN	OPEN	OPEN	18k	18k
R6594	33k	OPEN	OPEN	OPEN	OPEN	OPEN	OPEN	33k	33k
R6595	OPEN	OPEN	18k	18k	47k	47k	47k	OPEN	OPEN
R6596	OPEN	OPEN	33k	33k	15k	15k	15k	OPEN	OPEN
R6597	OPEN	0	OPEN	OPEN	OPEN	OPEN	OPEN	OPEN	OPEN
R6599	10k	10k	82k	10k	82k	82k	82k	10k	10k
C6501	0.1/16	OPEN	OPEN	OPEN	OPEN	OPEN	OPEN	0.1/16	0.1/16
C6502	0.1/16	OPEN	OPEN	OPEN	OPEN	OPEN	OPEN	0.1/16	0.1/16
C6503	0.1/16	OPEN	OPEN	OPEN	OPEN	OPEN	OPEN	0.1/16	0.1/16
C6504	0.1/16	OPEN	OPEN	OPEN	OPEN	OPEN	OPEN	0.1/16	0.1/16
C6505	0.1/16	OPEN	OPEN	OPEN	OPEN	OPEN	OPEN	0.1/16	0.1/16
C6506	0.1/16	OPEN	OPEN	OPEN	OPEN	OPEN	OPEN	0.1/16	0.1/16
C6507	0.1/16	OPEN	OPEN	OPEN	OPEN	OPEN	OPEN	0.1/16	0.1/16
C6508	0.1/16	OPEN	OPEN	OPEN	OPEN	OPEN	OPEN	0.1/16	0.1/16
C6509	0.1/16	OPEN	OPEN	OPEN	OPEN	OPEN	OPEN	0.1/16	0.1/16
C6510	0.1/16	OPEN	OPEN	OPEN	OPEN	OPEN	OPEN	0.1/16	0.1/16
C6511	0.1/16	OPEN	OPEN	OPEN	OPEN	OPEN	OPEN	0.1/16	0.1/16
C6512	0.1/16	OPEN	OPEN	OPEN	OPEN	OPEN	OPEN	0.1/16	0.1/16
C6513	0.1/16	OPEN	OPEN	OPEN	OPEN	OPEN	OPEN	0.1/16	0.1/16
C6514	0.1/16	OPEN	OPEN	OPEN	OPEN	OPEN	OPEN	0.1/16	0.1/16
C6515	0.1/16	OPEN	OPEN	OPEN	OPEN	OPEN	OPEN	0.1/16	0.1/16
C6521	OPEN	0.1/16	0.1/16	0.1/16	0.1/16	0.1/16	0.1/16	OPEN	OPEN
C6522	OPEN	0.1/16	0.1/16	0.1/16	0.1/16	0.1/16	0.1/16	OPEN	OPEN
C6523	OPEN	0.1/16	0.1/16	0.1/16	0.1/16	0.1/16	0.1/16	OPEN	OPEN
C6524	OPEN	0.1/16	0.1/16	0.1/16	0.1/16	0.1/16	0.1/16	OPEN	OPEN
C6525	OPEN	0.1/16	0.1/16	0.1/16	0.1/16	0.1/16	0.1/16	OPEN	OPEN
C6532	OPEN	0.1/16	OPEN	0.1/16	0.1/16	0.1/16	0.1/16	OPEN	OPEN
C6533	0.1/16	0.1/16	0.1/16	OPEN	NRSA63J -102X	NRSA63J -102X	NRSA63J -102X	0.1/16	0.1/16
C6572	1/16	OPEN	OPEN	OPEN	OPEN	OPEN	OPEN	1/16	1/16
C6573	OPEN	OPEN	/16	1/16	1/16	1/16	1/16	OPEN	OPEN

NOTE.
*1:NQR0498-001X
*2:NQR0489-002X
*4:MA111-X
*5:NQR0499-001X
RA0:NRZ0034-0R0W
PNP:2SA1530A/QR/-X
NPN:2SC3928A/QR/-X
L10:NQL79GM-100X
L22:NQL79GM-220X

c10463001a004_0425_4/17_0.0

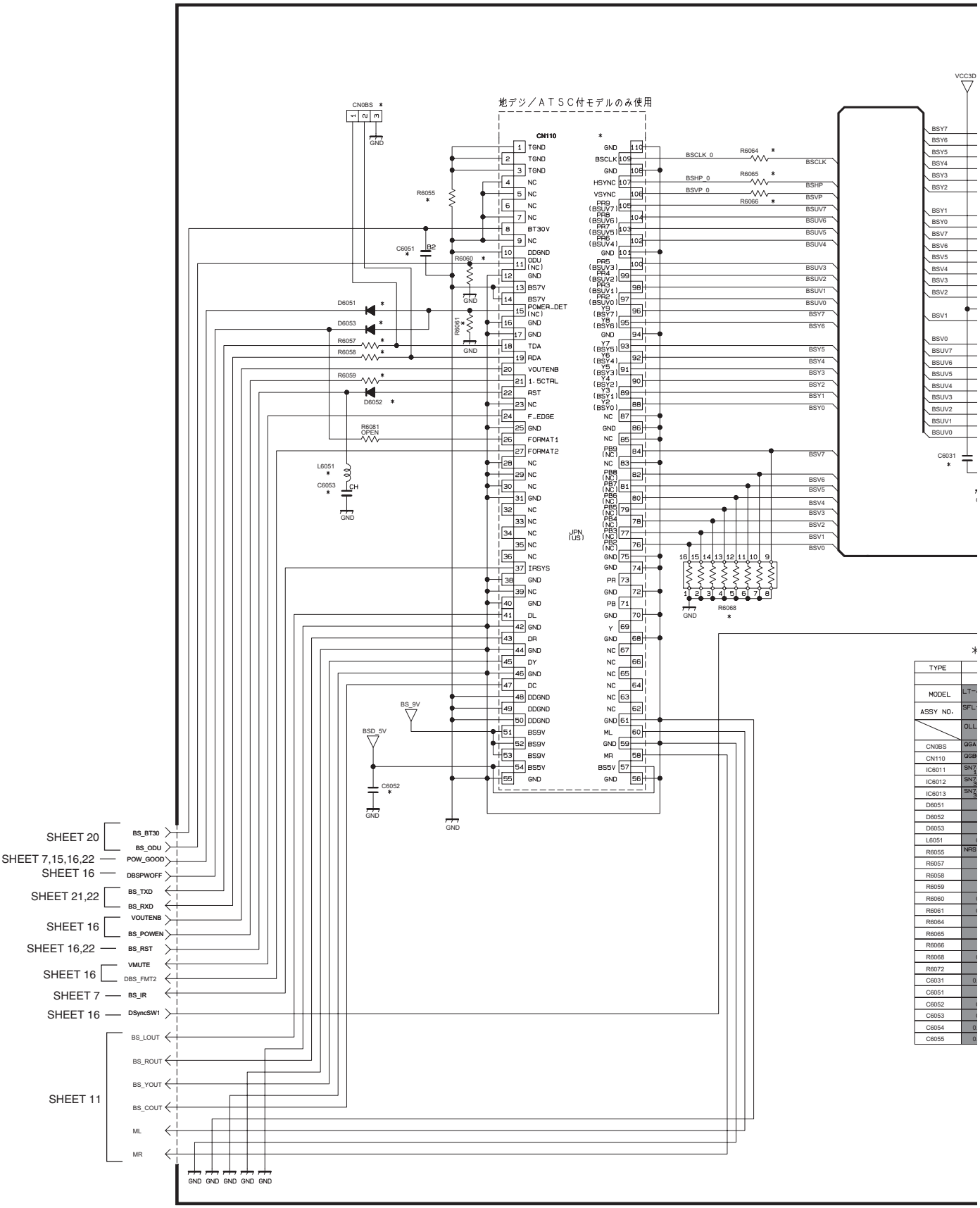
地デジ／ＡＴＳＣ付モデルのみ使用
CN0BS
CN110
VCC3D
SHEET 20
SHEET 7,15,16,22
SHEET 16
SHEET 21,22
SHEET 16
SHEET 16,22
SHEET 16
SHEET 7
SHEET 16
SHEET 11
BS_BT30
BS_ODU
POW_GOOD
DBSPWOFF
BS_TXD
BS_RXD
VOUTENB
BS_POWEN
BS_RST
VMUTE
DBS_FMT2
BS_IR
DSyncSW1
BS_LOUT
BS_ROUT
BS_YOUT
BS_COUT
ML
MR
BS_9V
BSD_5V
BSCLK_0
BSHP_0
BSVP_0
R6064
R6065
R6066
R6068
C6031
C6051
C6052
C6053
D6051
D6052
D6053
L6051
R6055
R6057
R6058
R6059
R6060
R6061
R6081
JPN
(US)

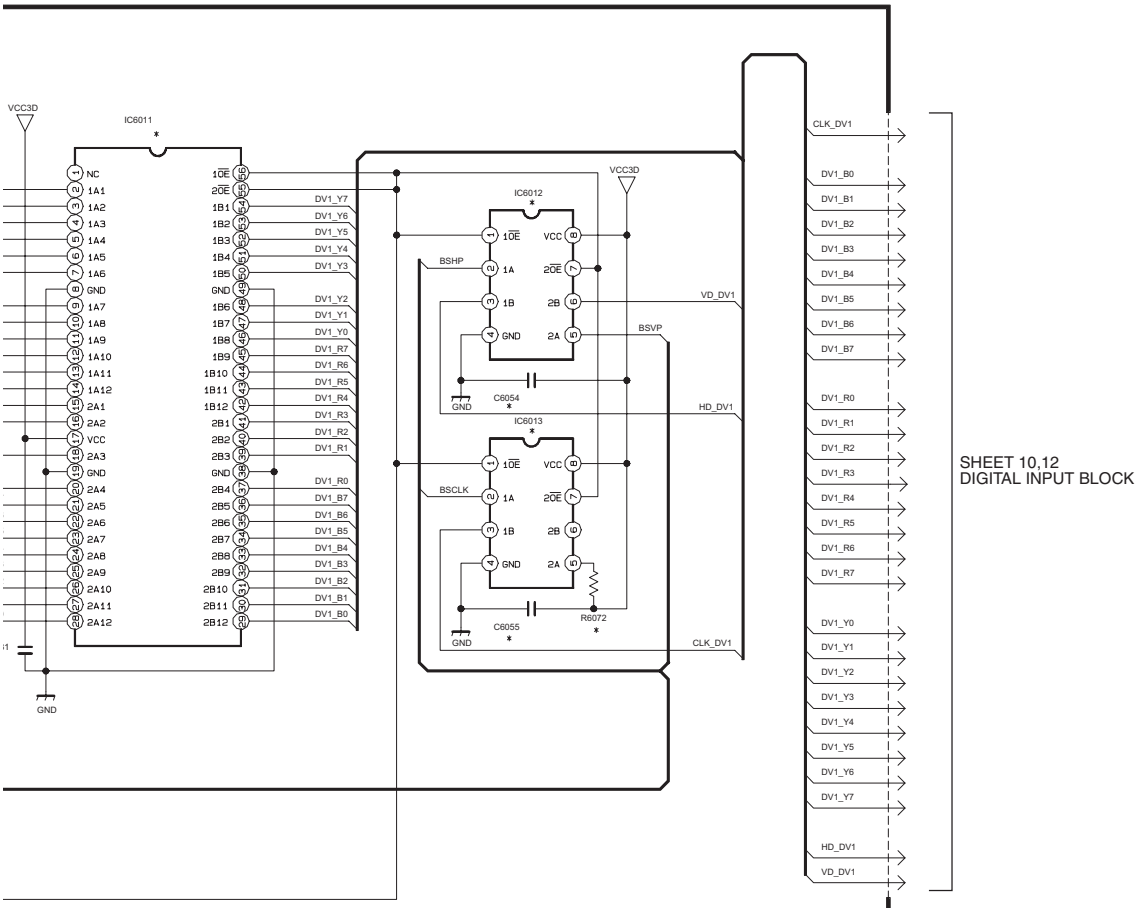

SHEET 10,12
DIGITAL INPUT BLOCK

* DIFFERENCE LIST

	LCD									
	JPN			US						
	LT-46LH800	LT-37LC85	LT-26LC80	LT-40X887 /X787	LT-37X887 /X787/X667	LT-32X887 X667/X787	LT-32XM57	LT-46FH97 /40FH97	LT-46FN97 /40FN97
	SFL-0D071A	SFL-0D072A	SFL-0D074A	SFL-0D171A etc	SFL-0D172A etc	SFL-0D173A 175A,178Aetc	SFL-0D180A	SFL-0D182A etc	SFL-0D184A etc
	0LLC10547 -02	0LLC10547 -04	0LLC10547 -05 etc	0LLC10547 -06 etc	0LLC10547 -07 etc	0LLC10547 -14	0LLC10547 -16 etc	0LLC10547 -18 etc	
	QGA1501C5 -03W	QGA1501C5 -03W	QGA1501C5 -03W	OPEN	OPEN	OPEN	OPEN	OPEN	OPEN
	QGB0603L1 -B0	QGB0603L1 -B0	QGB0603L1 -B0	OPEN	OPEN	OPEN	OPEN	QGB0603L1 -B0	QGB0603L1 -B0
	SN74CBQ 16211G-X	SN74CBQ 16211G-X	SN74CBQ 16211G-X	OPEN	OPEN	OPEN	OPEN	SN74CBQ 16211G-X	SN74CBQ 16211G-X
	SN74CBQ 3306AU-X	SN74CBQ 3306AU-X	SN74CBQ 3306AU-X	OPEN	OPEN	OPEN	OPEN	SN74CBQ 3306AU-X	SN74CBQ 3306AU-X
	SN74CBQ 3306AU-X	SN74CBQ 3306AU-X	SN74CBQ 3306AU-X	OPEN	OPEN	OPEN	OPEN	SN74CBQ 3306AU-X	SN74CBQ 3306AU-X
	*4	*4	*4	OPEN	OPEN	OPEN	OPEN	OPEN	OPEN
	*4	*4	*4	OPEN	OPEN	OPEN	OPEN	*4	*4
	*4	*4	*4	OPEN	OPEN	OPEN	OPEN	OPEN	OPEN
	OPEN	OPEN	OPEN	OPEN	OPEN	OPEN	OPEN	NRSA02J -0R0X	NRSA02J -0R0X
	NRS181J -0R0X	NRS181J -0R0X	NRS181J -0R0X	OPEN	OPEN	OPEN	OPEN	NRS181J -0R0X	NRS181J -0R0X
	22	22	22	OPEN	OPEN	OPEN	OPEN	22	22
	22	22	22	OPEN	OPEN	OPEN	OPEN	22	22
	0	0	0	OPEN	OPEN	OPEN	OPEN	100	100
	OPEN	OPEN	OPEN	OPEN	OPEN	OPEN	OPEN	0	0
	OPEN	OPEN	OPEN	OPEN	OPEN	OPEN	OPEN	0	0
	22	22	22	OPEN	OPEN	OPEN	OPEN	22	22
	22	22	22	OPEN	OPEN	OPEN	OPEN	22	22
	22	22	22	OPEN	OPEN	OPEN	OPEN	22	22
	OPEN	OPEN	OPEN	OPEN	OPEN	OPEN	OPEN	NRZ0080 -0R0X	NRZ0080 -0R0X
	0	0	0	OPEN	OPEN	OPEN	OPEN	0	0
	0.1/16	0.1/16	0.1/16	OPEN	OPEN	OPEN	OPEN	0.1/16	0.1/16
	0.1	0.1	0.1	OPEN	OPEN	OPEN	OPEN	0.1	0.1
	OPEN	OPEN	OPEN	OPEN	OPEN	OPEN	OPEN	NCJ410K -226X-U	NCJ410K -226X-U
	OPEN	OPEN	OPEN	OPEN	OPEN	OPEN	OPEN	10p	10p
	0.1/16	0.1/16	0.1/16	OPEN	OPEN	OPEN	OPEN	0.1/16	0.1/16
	0.1/16	0.1/16	0.1/16	OPEN	OPEN	OPEN	OPEN	0.1/16	0.1/16

NOTE.

*1 : NQR0498-001X
*2 : NQR0489-002X
*4 : MA111-X
*5 : NQR0499-001X
RA0 : NRZ0034-0R0W
PNP : 2SA1530A/QR/-X
NPN : 2SC3928A/QR/-X
L10 : NQL79GM-100X
L22 : NQL79GM-220X

DIGITAL PWB ASS'Y (12/16)
SFL0D178A-M2 [LT-32X667/Z]
SFL0D175A-M2 [LT-32X787/Z]
SFL0D173A-M2 [LT-32X887/Z]

c10463001a013_0425_13/17_0.0

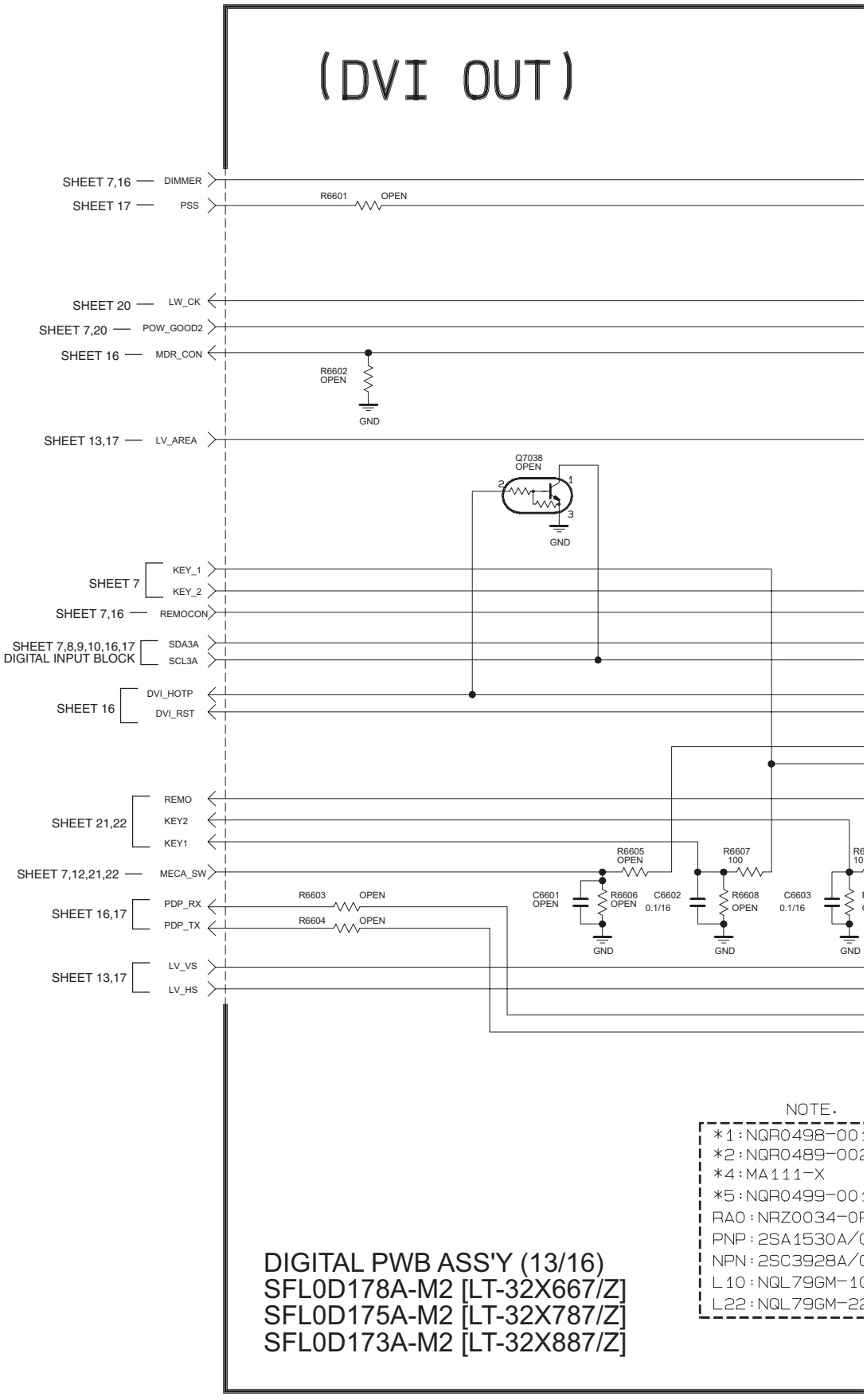
(DVI OUT)
SHEET 7,16
DIMMER
SHEET 17
PSS
R6601
OPEN
SHEET 20
LW_CK
SHEET 7,20
POW_GOOD2
SHEET 16
MDR_CON
R6602
OPEN
GND
SHEET 13,17
LV_AREA
Q7038
OPEN
GND
SHEET 7
KEY_1
KEY_2
SHEET 7,16
REMOCON
SHEET 7,8,9,10,16,17
DIGITAL INPUT BLOCK
SDA3A
SCL3A
SHEET 16
DVI_HOTP
DVI_RST
SHEET 21,22
REMO
KEY2
KEY1
SHEET 7,12,21,22
MECA_SW
R6605
OPEN
R6607
100
C6601
OPEN
R6606
OPEN
C6602
0.1/16
R6608
OPEN
C6603
0.1/16
GND
SHEET 16,17
PDP_RX
PDP_TX
R6603
OPEN
R6604
OPEN
SHEET 13,17
LV_VS
LV_HS
NOTE.
*1:NQR0498-00
*2:NQR0489-00
*4:MA111-X
*5:NQR0499-00
RA0:NRZ0034-0
PNP:2SA1530A/
NPN:2SC3928A/
L10:NQL79GM-1
L22:NQL79GM-2
DIGITAL PWB ASS'Y (13/16)
SFL0D178A-M2 [LT-32X667/Z]
SFL0D175A-M2 [LT-32X787/Z]
SFL0D173A-M2 [LT-32X887/Z]

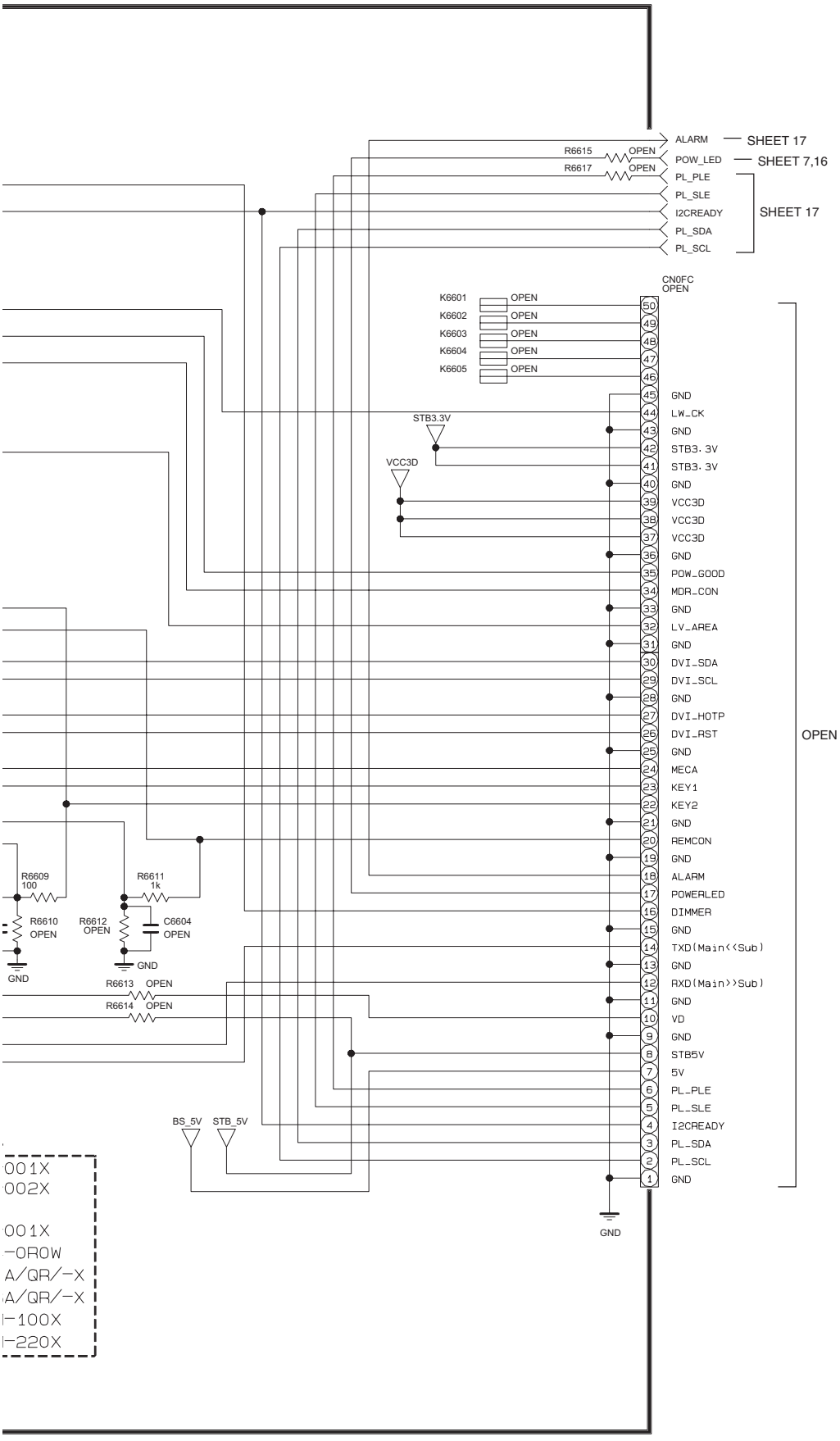

c10463001a012_0425_12/17_0.0

DIGITAL PWB ASS'Y (14/16)
SFL0D178A-M2 [LT-32X667/Z]
SFL0D175A-M2 [LT-32X787/Z]
SFL0D173A-M2 [LT-32X887/Z]

* DIFFERENCE LIST

TYPE	LCD								
	JPN			US					
MODEL	LT-46LHB00	LT-37LC85	LT-26LC80	LT-40X887 /X787	LT-37X887 /X787/X667	LT-32X887 X667/X787	LT-32XM57	LT-46FH97 /40FH97	LT-46FN97 /40FN97
ASSY NO.	SFL-0D071A	SFL-0D072A	SFL-0D074A	SFL-0D171A etc	SFL-0D172A etc	SFL-0D173A 175A,178A etc	SFL-0D180A	SFL-0D182A etc	SFL-0D184A etc
	OLLC10547	OLLC10547 -02	OLLC10547 -04	OLLC10547 -05 etc	OLLC10547 -06 etc	OLLC10547 -07 etc	OLLC10547 -14	OLLC10547 -16 etc	OLLC10547 -18 etc
K6052	*2	*2	*2	OPEN	OPEN	OPEN	OPEN	*2	*2
L9204	NQR0562 -014X	NQR0562 -014X	NQR0562 -014X	OPEN	OPEN	OPEN	OPEN	NQR0562 -014X	NQR0562 -014X
L9307	NQR0351 -003X	OPEN	OPEN	NQR0351 -003X	OPEN	OPEN	NQR0351 -003X	NQR0351 -003X	NQR0351 -003X
LC9301	NQR0470 -003X	NQR0470 -003X	NQR0470 -003X	OPEN	OPEN	OPEN	NQR0470 -003X	NQR0470 -003X	NQR0470 -003X
R9302	NRSA02J -0R0X	NRSA02J -0R0X	NRSA02J -0R0X	OPEN	OPEN	OPEN	NRSA02J -0R0X	NRSA02J -0R0X	NRSA02J -0R0X
C9306	OPEN	OPEN	OPEN	OPEN	OPEN	OPEN	OPEN	NRSA63J -0R0X	NRSA63J -0R0X

SHEET 17 — LV_CK
SHEET 19 — LW_CK

JCC5068 IC6001

VCC1.2D — L6901 NQR0499-001X — L6901 OPEN — C6901 100 /4 NBZ0007-107X

C6902 0.1/16 — C6903 0.1/16 — C6904 0.1/16 — C6905 0.1/16 — C6906 0.1/16 — C6907 0.1/16 — C6908 0.1/16 — C6909 0.1/16 — C6910 0.1/16 — C6911 0.1/16 — C6656 1/16

1.2V_VDD — 1.2V_GND

VCC3D — L6912 NQR0499-001X — L6902 OPEN — C6912 1000 NCB11AK-106X — C6913 0.1/16 — C6914 0.1/16 — C6915 0.1/16 — C6916 0.1/16 — C6917 0.1/16 — C6918 0.1/16 — C6919 0.1/16

3.3V_VDD — 3.3V_GND

BS_5V — VCC3D — C6929 1/10 — IC6901 R1141Q331B-X (VDD, CE, VOUT, GND)

VCC3D — K6922 OPEN — K6923 OPEN — L6926 OPEN — L6925 OPEN — C6930 OPEN — C6931 OPEN — X6901 OPEN (VDD, OUT, EN/DL, GND)

VCC1.2D — L6924 L22 — C6925 10 /10 — C6926 0.1/16 — L6925 L22 — C6927 10 /10 — C6928 0.1/16

VCC3D — L6921 OPEN — L6931 NQR0499-001X — L6922 0 — C6921 10/10 — C6922 0.1/16 — L6923 OPEN — C6923 10 /10 — C6924 0.1/16

R6924 0 — LV_CK0

90	CLK_RO	PLL3
548	PLLK_AVDD	PLL_K
453	PLLK_DVDD	PLL_K
539	PLLK_AGND	PLL_K
547	PLLK_DGND	PLL_K
119	PLL1_AVDD	PLL1
536	PLL1_AGND	PLL1
141	PLL2_AVDD	PLL2
569	PLL4_AVDD	PLL4
14	PLL2_AGND	PLL2
473	PLL4_AGND	PLL4
170	PLL3_AVDD1	PLL3
569	PLL3_AVDD2	PLL3
202	PLL3_AGND1	PLL3
206	PLL3_AGND2	PLL3
539	TCLKI	PLL2
11	CLK_RI	PLL3
10	CLK_RWI	PLL4
193	PLL5_AVDD	PLL5
60	PLL5_AGND	PLL5

R6926 OPEN — R6925 OPEN — VCC_PLL5 — R6921 0 — R6922 0 — R6923 0 — LW_CK0 — K6921 NRSA02J-0R0X

CN0DC GGA2001C6-15X

15	BT32V
14	BS_A0DV
13	GND
12	9V
11	GND
10	LCD5V/12V
9	GND
8	5V
7	GND
6	19V
5	LCD5V/12V
4	LB_POW
3	GND
2	PFC_POW
1	LB_PRO

CN1DC GGA2001F6-15X

15	BT32V
14	BS_A0DV
13	GND
12	9V
11	GND
10	LCD5V/12V
9	GND
8	5V
7	GND
6	19V
5	LCD5V/12V
4	LB_POW
3	GND
2	PFC_POW
1	LB_PRO

LCD5V/12V — L9306 NQR0351-003X — L9307 — R9307 OPEN — LC9307 NQR0483-00 — C9305 OPEN — R9306 NCB21EK-102X — C9301 OPEN — K6052 * — C9209 1000p — BSD_5V — L9204 * — C9313 OPEN — C9314 OPEN

SHEET 7,16 — LB_PRO
SHEET 16 — PFC_POW

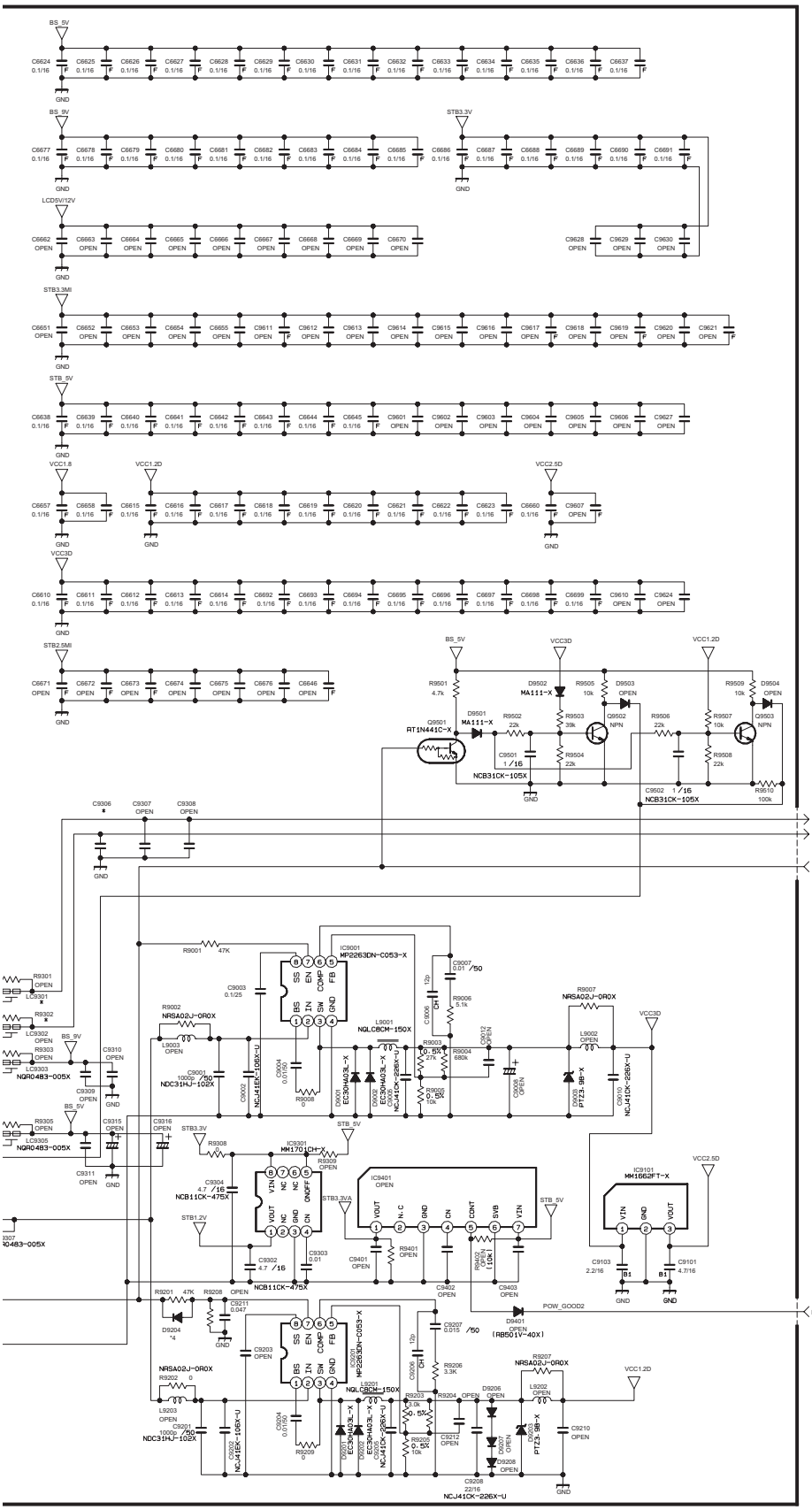

c10463001a010_0425_10/17_0.0

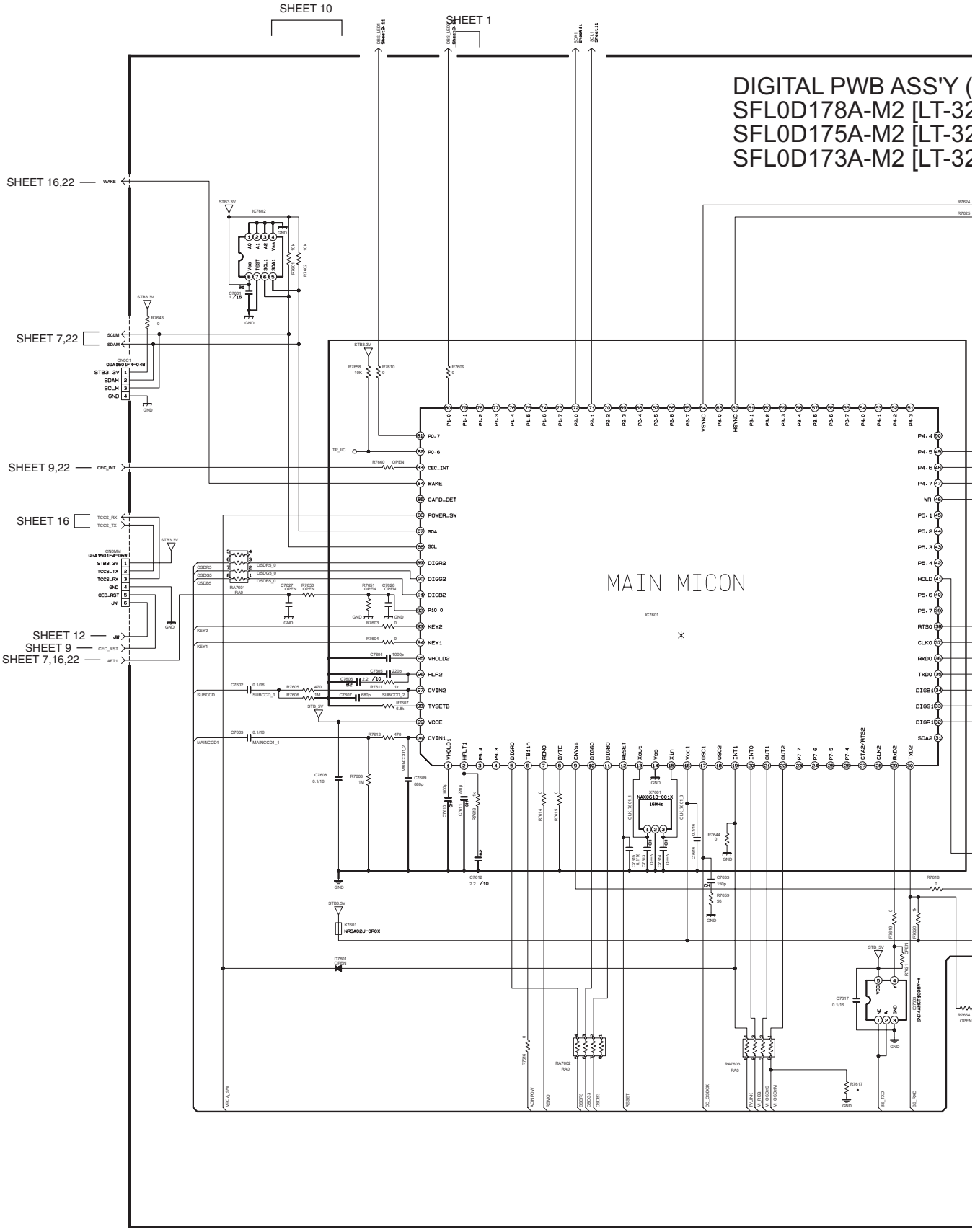
SHEET 10
SHEET 1
DIGITAL PWB ASS'Y (
SFL0D178A-M2 [LT-32
SFL0D175A-M2 [LT-32
SFL0D173A-M2 [LT-32
SHEET 16,22
SHEET 7,22
SHEET 9,22
SHEET 16
SHEET 12
SHEET 9
SHEET 7,16,22
MAIN MICON
IC7601
WAKE
SCLM
SDAM
CEC_INT
CARD_DET
POWER_SW
SDA
SCL
DIGR2
DIGG2
DIGB2
P10.0
KEY2
KEY1
VHOLD2
HLF2
CVIN2
TVSETB
VCDE
CVIN1
VHOLD1
HFLT1
P5.4
P5.3
DIGR0
TBS1in
RENO
BYTE
CNVss
DIGG0
DIGB0
RESET
Xout
Vss
Xin
Vcc1
OSC1
OSC2
INT1
INT0
OUT1
OUT2
P7.7
P7.6
P7.5
P7.4
CTS2/RTS2
CLK2
RxD2
TxD2
P0.7
P0.6
P1.0
P1.1
P1.2
P1.3
P1.4
P1.5
P1.6
P1.7
P2.0
P2.1
P2.2
P2.3
P2.4
P2.5
P2.6
P2.7
VSYNC
HSYNC
P3.1
P3.2
P3.3
P3.4
P3.5
P3.6
P3.7
P4.0
P4.1
P4.2
P4.3
P4.4
P4.5
P4.6
P4.7
WR
P5.1
P5.2
P5.3
P5.4
HOLD
P5.6
P5.7
RTS0
CLK0
RxD0
TxD0
DIGB1
DIGG1
DIGR1
SDA2
STB3.3V
STB_5V
TCCS_RX
TCCS_TX
STB3.3-3V
TCCS_RX
GND
CEC_RST
JW
AFT1
SDAM
SCLM
STB3.3V
GND
IC7602
R7643
R7658
R7610
R7609
R7624
R7625
R7692
R7603
R7604
R7605
R7606
R7607
R7611
R7612
R7608
R7609
R7633
R7659
R7644
R7618
R7619
R7617
R7654
C7602
C7603
C7604
C7605
C7606
C7607
C7608
C7609
C7612
C7633
C7617
C7618
C7619
C7620
C7621
C7622
C7623
C7624
C7625
C7626
C7627
C7628
C7629
C7630
C7631
C7632
C7634
C7635
C7636
C7637
C7638
C7639
C7640
C7641
C7642
C7643
C7644
C7645
C7646
C7647
C7648
C7649
C7650
C7651
C7652
C7653
C7654
C7655
C7656
C7657
C7658
C7659
C7660
C7661
C7662
C7663
C7664
C7665
C7666
C7667
C7668
C7669
C7670
C7671
C7672
C7673

NOTE : Refer to the part list for the part number of IC7602.

Y (15/16)
-32X667/Z]
-32X787/Z]
-32X887/Z]

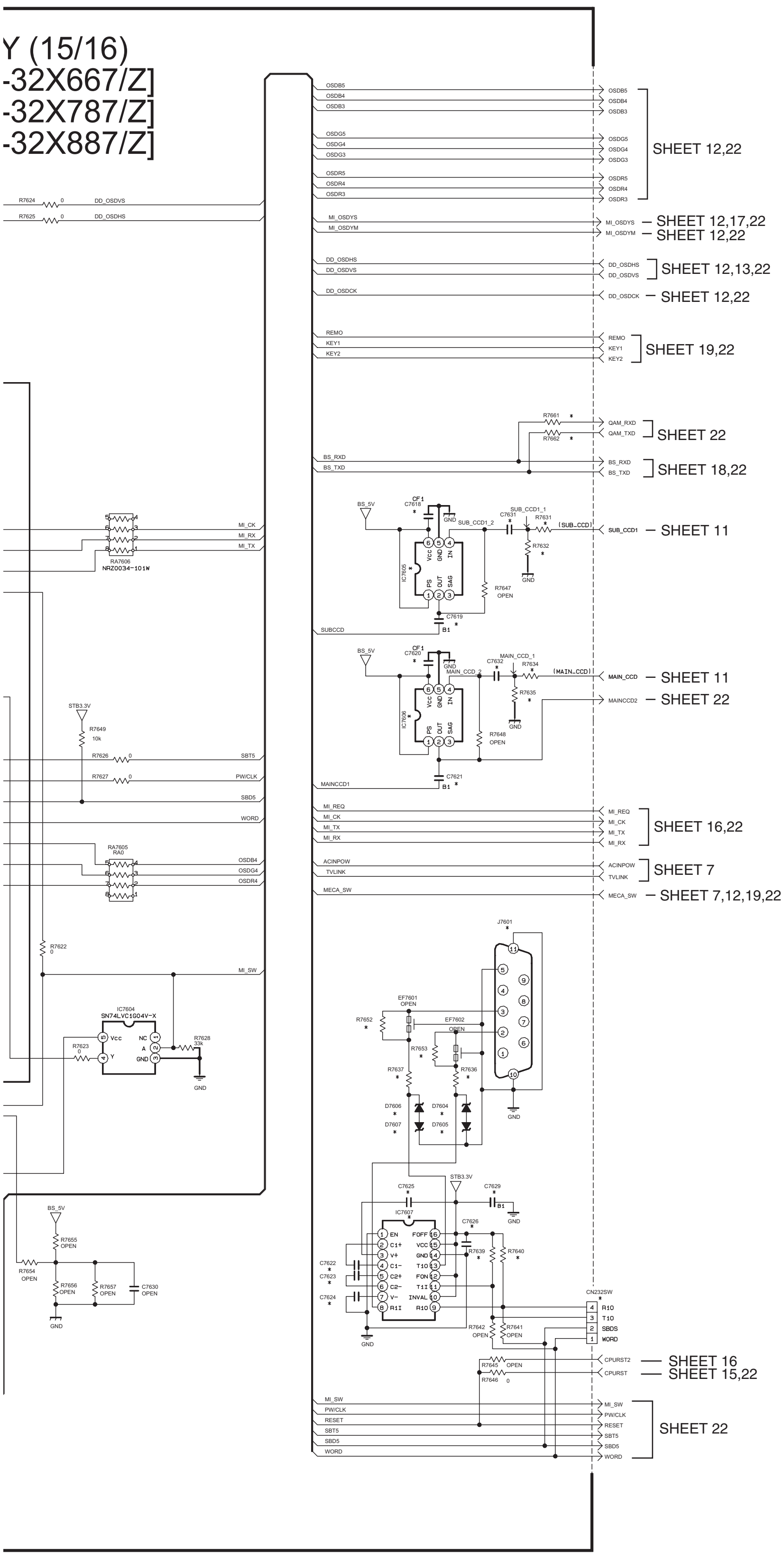

* DIFFERENCE LIST

TYPE	LCD								
	JPN			US					
MODEL	LT-46LH800	LT-37LC85	LT-26LC80	LT-40X887 /X787	LT-37X887 /X787/X667	LT-32X887 X667/X787	LT-32XM57	LT-46FH97 /40FH97	LT-46FN97 /40FN97
ASSY NO.	SFL-0D071A	SFL-0D072A	SFL-0D074A	SFL-0D171A etc	SFL-0D172A etc	SFL-0D173A 175A,178A etc	SFL-0D180A	SFL-0D182A etc	SFL-0D184A etc
	0LLC10547	0LLC10547 -02	0LLC10547 -04	0LLC10547 -05 etc	0LLC10547 -06 etc	0LLC10547 -07 etc	0LLC10547 -14	0LLC10547 -16 etc	0LLC10547 -18 etc
CN232SW	OPEN	OPEN	OPEN	OPEN	OPEN	OPEN	OPEN	QGA1501F4 -04W	OPEN
IC7601	M306V7FG -157FP	M306V7FG -157FP	M306V7FG -157FP	M306V7FG -153FP	M306V7FG -153FP	M306V7FG -153FP	M306V7FG -153FP	M306V7FG -155FP	M306V7FG -155FP
IC7605	OPEN	OPEN	OPEN	MM1673XN -X	MM1673XN -X	MM1673XN -X	MM1673XN -X	MM1673XN -X	MM1673XN -X
IC7606	OPEN	OPEN	OPEN	MM1673XN -X	MM1673XN -X	MM1673XN -X	MM1673XN -X	MM1673XN -X	MM1673XN -X
IC7607	OPEN	OPEN	OPEN	OPEN	OPEN	OPEN	OPEN	ICL3221CAZ -X	OPEN
J7601	OPEN	OPEN	OPEN	OPEN	OPEN	OPEN	OPEN	QNZ0587 -001	OPEN
D7604	OPEN	OPEN	OPEN	OPEN	OPEN	OPEN	OPEN	MA8120-X	OPEN
D7605	OPEN	OPEN	OPEN	OPEN	OPEN	OPEN	OPEN	MA8120-X	OPEN
D7606	OPEN	OPEN	OPEN	OPEN	OPEN	OPEN	OPEN	MA8120-X	OPEN
D7607	OPEN	OPEN	OPEN	OPEN	OPEN	OPEN	OPEN	MA8120-X	OPEN
R7609	0	0	0	OPEN	OPEN	OPEN	OPEN	0	0
R7610	0	0	0	OPEN	OPEN	OPEN	OPEN	0	0
R7631	OPEN	OPEN	OPEN	1k	1k	1k	1k	1k	1k
R7632	OPEN	OPEN	OPEN	2.2k	2.2k	2.2k	2.2k	2.2k	2.2k
R7634	OPEN	OPEN	OPEN	1k	1k	1k	1k	1k	1k
R7635	OPEN	OPEN	OPEN	2.2k	2.2k	2.2k	2.2k	2.2k	2.2k
R7636	OPEN	OPEN	OPEN	OPEN	OPEN	OPEN	OPEN	1k	OPEN
R7637	OPEN	OPEN	OPEN	OPEN	OPEN	OPEN	OPEN	1k	OPEN
R7639	OPEN	OPEN	OPEN	OPEN	OPEN	OPEN	OPEN	10k	OPEN
R7640	OPEN	OPEN	OPEN	OPEN	OPEN	OPEN	OPEN	10k	OPEN
R7652	OPEN	OPEN	OPEN	OPEN	OPEN	OPEN	OPEN	0	OPEN
R7653	OPEN	OPEN	OPEN	OPEN	OPEN	OPEN	OPEN	0	OPEN
R7661	OPEN	OPEN	OPEN	0	0	0 0		OPEN	OPEN
R7662	OPEN	OPEN	OPEN	0	0	0 0		OPEN	OPEN
C7618	OPEN	OPEN	OPEN	4.7/16	4.7/16	4.7/16	4.7/16	4.7/16	4.7/16
C7619	OPEN	OPEN	OPEN	10/10	10/10	10/10	10/10	10/10	10/10
C7620	OPEN	OPEN	OPEN	4.7/16	4.7/16	4.7/16	4.7/16	4.7/16	4.7/16
C7621	OPEN	OPEN	OPEN	10/10	10/10	10/10	10/10	10/10	10/10
C7622	OPEN	OPEN	OPEN	OPEN	OPEN	OPEN	OPEN	0.1/16	OPEN
C7623	OPEN	OPEN	OPEN	OPEN	OPEN	OPEN	OPEN	0.1/16	OPEN
C7624	OPEN	OPEN	OPEN	OPEN	OPEN	OPEN	OPEN	0.1/16	OPEN
C7625	OPEN	OPEN	OPEN	OPEN	OPEN	OPEN	OPEN	0.1/16	OPEN
C7626	OPEN	OPEN	OPEN	OPEN	OPEN	OPEN	OPEN	0.1/16	OPEN
C7629	OPEN	OPEN	OPEN	OPEN	OPEN	OPEN	OPEN	10/10	OPEN
C7631	OPEN	OPEN	OPEN	0.22/10	0.22/10	0.22/10	0.22/10	0.22/10	0.22/10
C7632	OPEN	OPEN	OPEN	0.22/10	0.22/10	0.22/10	0.22/10	0.22/10	0.22/10

NOTE.
*1:NQR0498-001X
*2:NQR0489-002X
*4:MA111-X
*5:NQR0499-001X
RA0:NRZ0034-0R0W
PNP:2SA1530A/QR/-X
NPN:2SC3928A/QR/-X
L10:NQL79GM-100X
L22:NQL79GM-220X

c10463001a006_0425_6/17_0.0

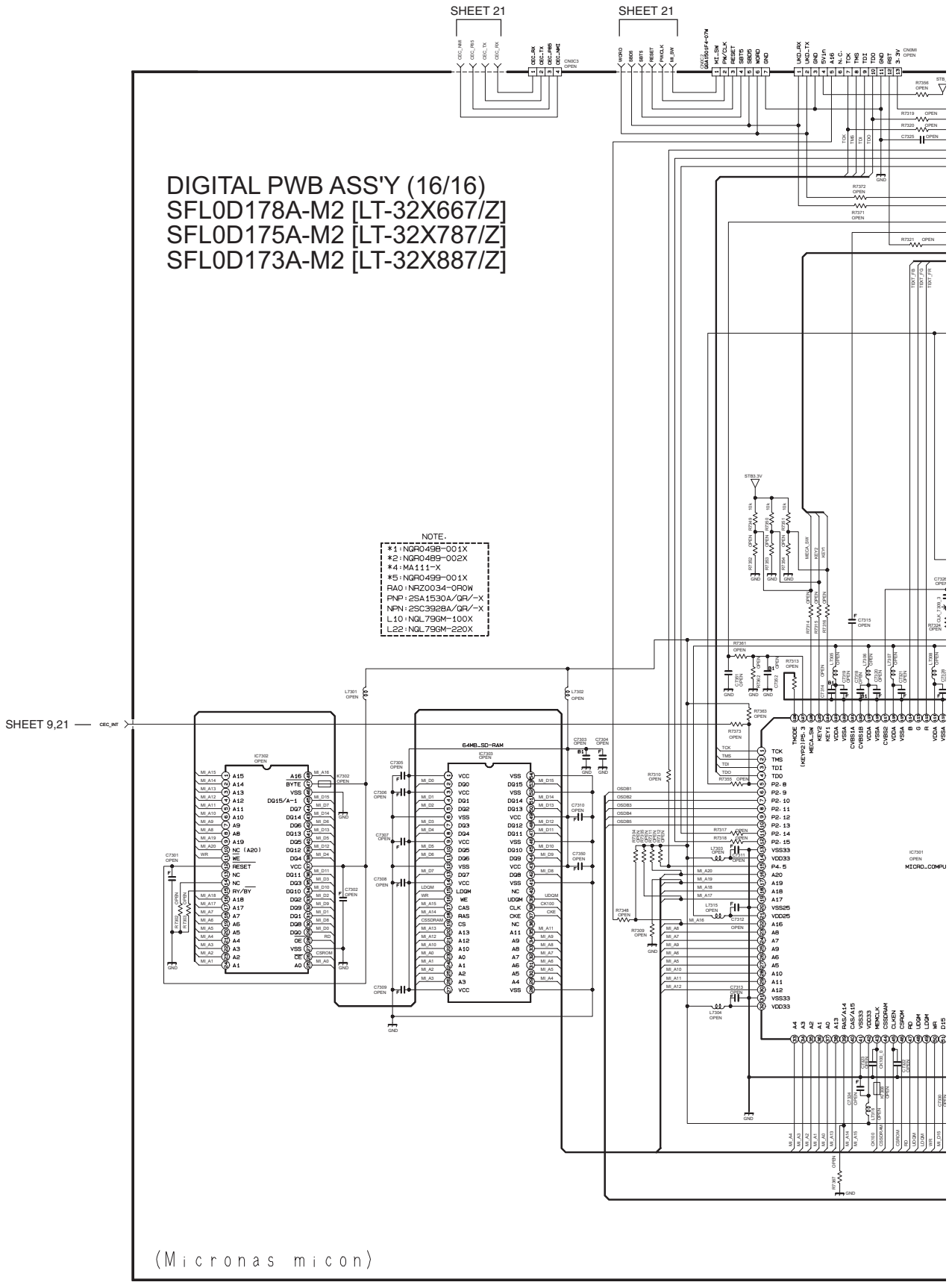
DIGITAL PWB ASS'Y (16/16)
SFL0D178A-M2 [LT-32X667/Z]
SFL0D175A-M2 [LT-32X787/Z]
SFL0D173A-M2 [LT-32X887/Z]
SHEET 21
SHEET 21
SHEET 9,21
CEC_INT
NOTE.
*1:NQR0498-001X
*2:NQR0499-002X
*4:MA111-X
*5:NQR0499-001X
RA0:NRZ0034-0R0W
PNP:2SA1530A/QR/-X
NPN:2SC3928A/QR/-X
L10:NQL79GM-100X
L22:NQL79GM-220X
64MB_SD-RAM
(Micronas micon)

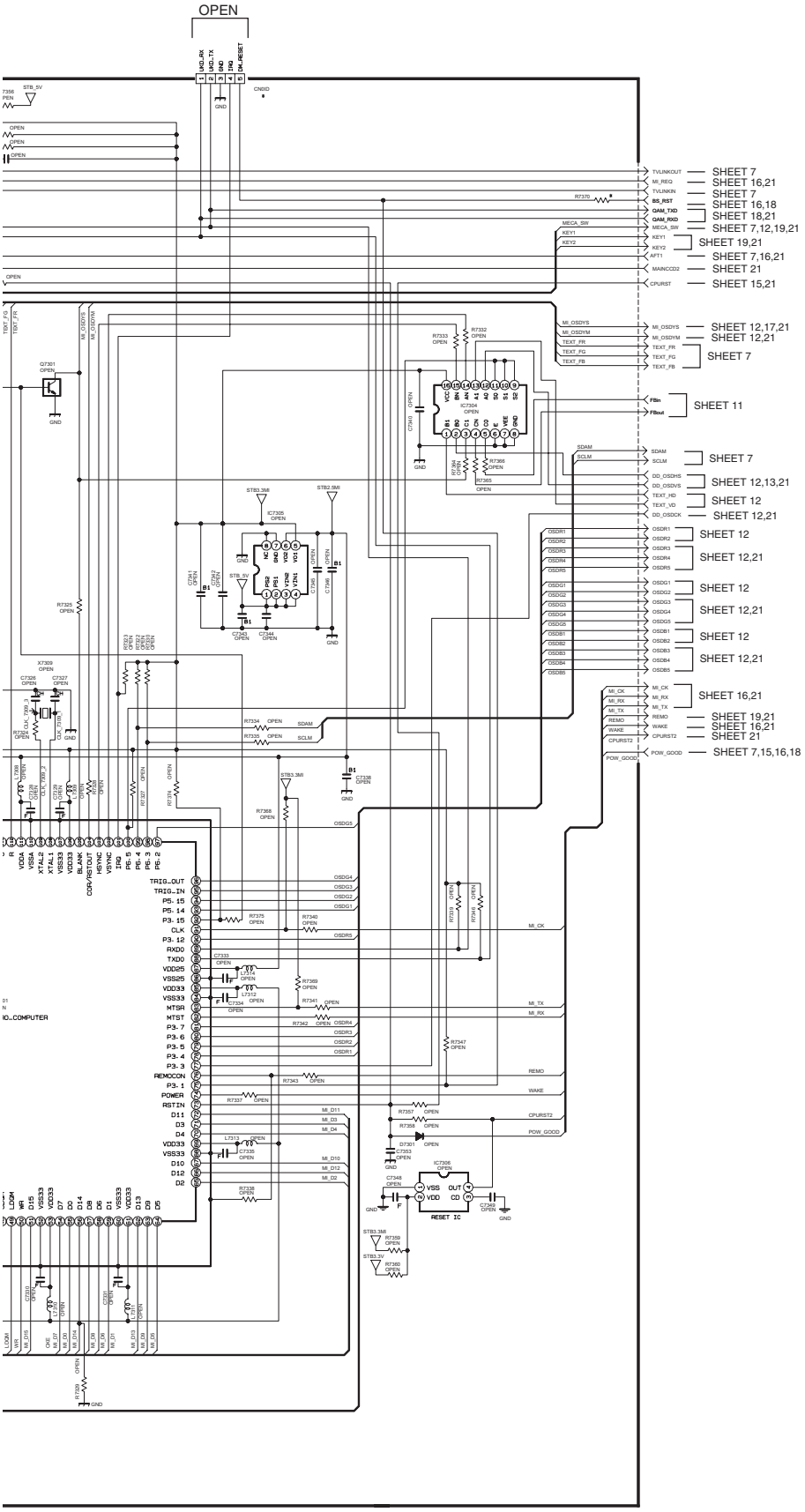

* DIFFERENCE LIST

TYPE	LCD								
	JPN			US					
MODEL	LT-46LH800	LT-37LC85	LT-26LC80	LT-40X887 /X787	LT-37X887 /X787/X667	LT-32X887 X667/X787	LT-32XM57	LT-46FH97 /40FH97	LT-46FN97 /40FN97
ASSY NO.	SFL-0D071A	SFL-0D072A	SFL-0D074A	SFL-0D171A etc	SFL-0D172A etc	SFL-0D173A 175A,176A etc	SFL-0D180A	SFL-0D182A etc	SFL-0D184A etc
	OLLC10547	OLLC10547 -02	OLLC10547 -04	OLLC10547 -05 etc	OLLC10547 -06 etc	OLLC10547 -07 etc	OLLC10547 -14	OLLC10547 -16 etc	OLLC10547 -18 etc
CNGID	OPEN	OPEN	OPEN	GGA1217F1 -05X	GGA1217F1 -06X	GGA1217F1 -07X	GGA1217F1 -08X	OPEN	OPEN
R7370	OPEN	OPEN	OPEN	0	0	0	0	OPEN	OPEN

c10463001a007_0425_7/17_0.0

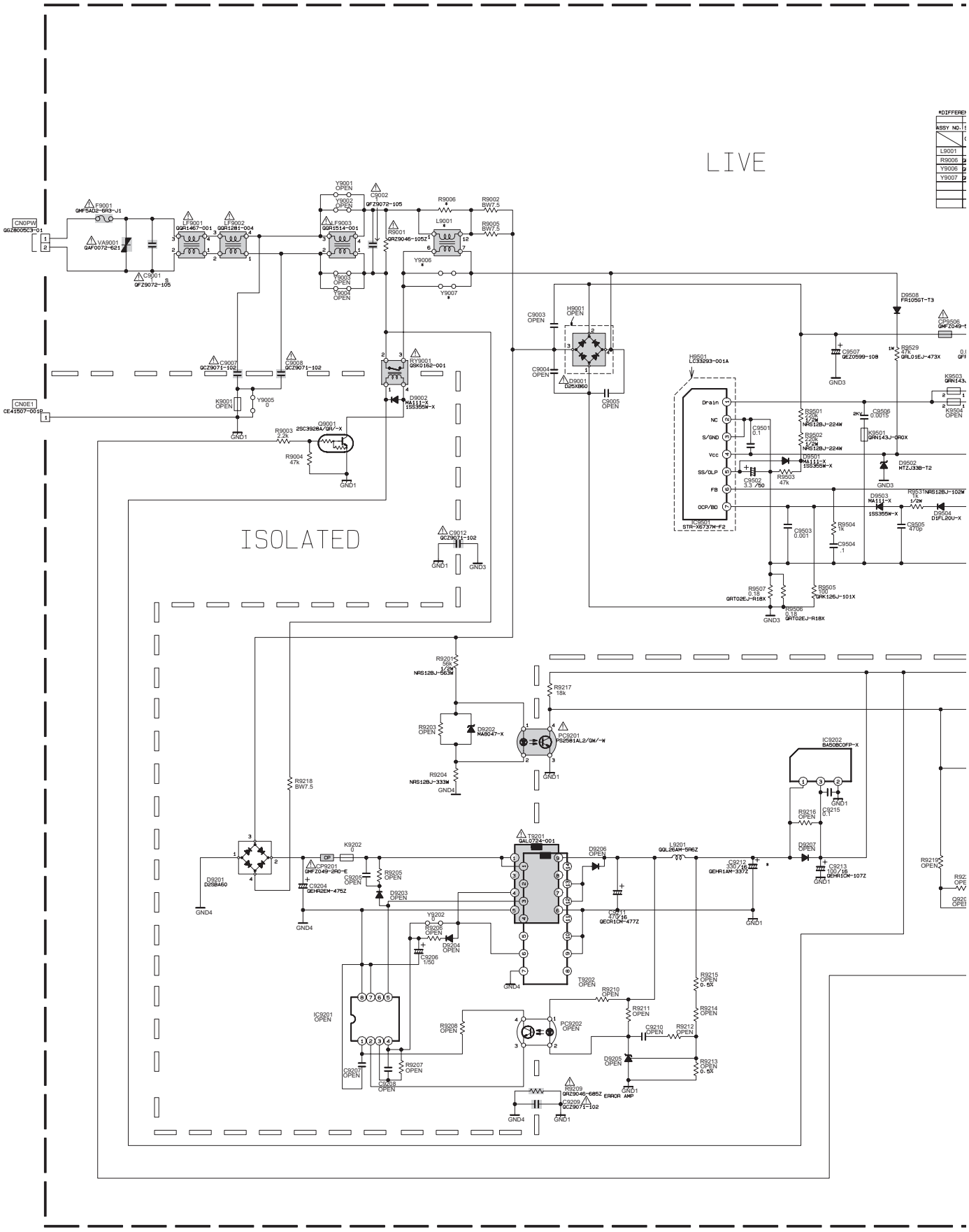
LIVE
ISOLATED
CN0PW
CN0E1
F9001
LF9001
LF9002
VA9001
C9001
Y9001
Y9002
Y9003
Y9004
C9002
LF9003
R9001
L9001
R9006
R9002
R9005
Y9006
Y9007
C9003
H9001
C9004
D9001
C9005
D9508
C9506
C9507
R9529
K9503
K9504
H9501
IC9501
STR-X6737M-F2
Drain
NC
S/GND
Vcc
SS/OLP
FB
OCP/BD
R9501
R9502
C9501
C9502
R9503
D9501
C9508
K9501
D9502
D9503
R9531
D9504
C9503
R9504
C9505
C9504
R9507
R9505
R9506
C9007
C9008
RY9001
D9002
K9001
Y9005
Q9001
R9003
R9004
C9012
R9201
R9217
R9203
D9202
PC9201
R9204
R9218
IC9202
C9215
R9216
D9207
C9213
R9219
D9201
K9202
CP9201
C9204
R9205
C9205
D9203
T9201
D9206
L9201
C9212
C9211
Y9202
R9208
D9204
C9206
T9202
R9210
R9211
R9214
R9215
IC9201
R9208
PC9202
C9210
R9212
D9205
R9213
C9207
C9208
R9209
C9209
ERROR AMP
GND1
GND3
GND4

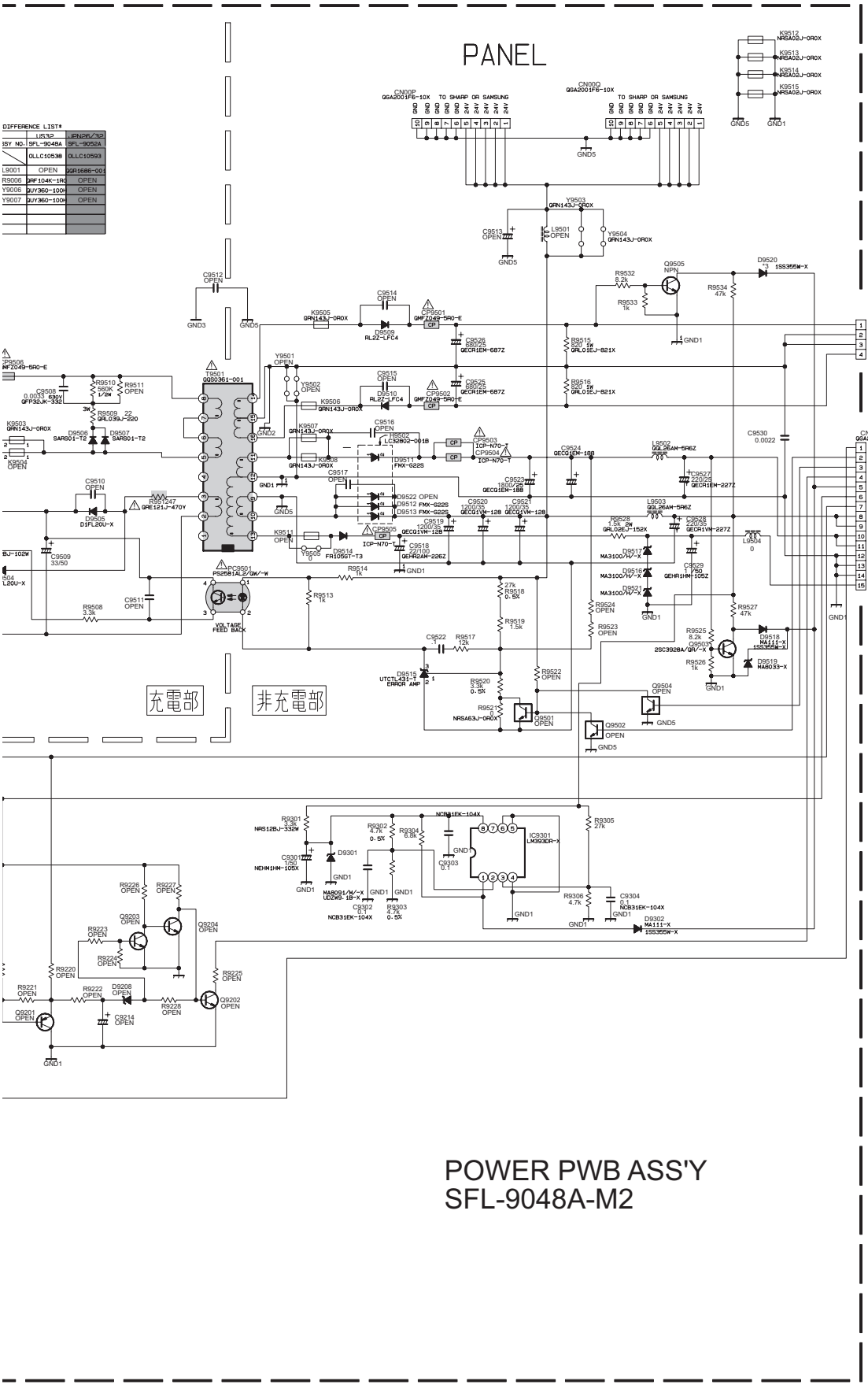

POWER PWB ASS'Y
SFL-9048A-M2

c10476001a001_0410_1/1_0.0

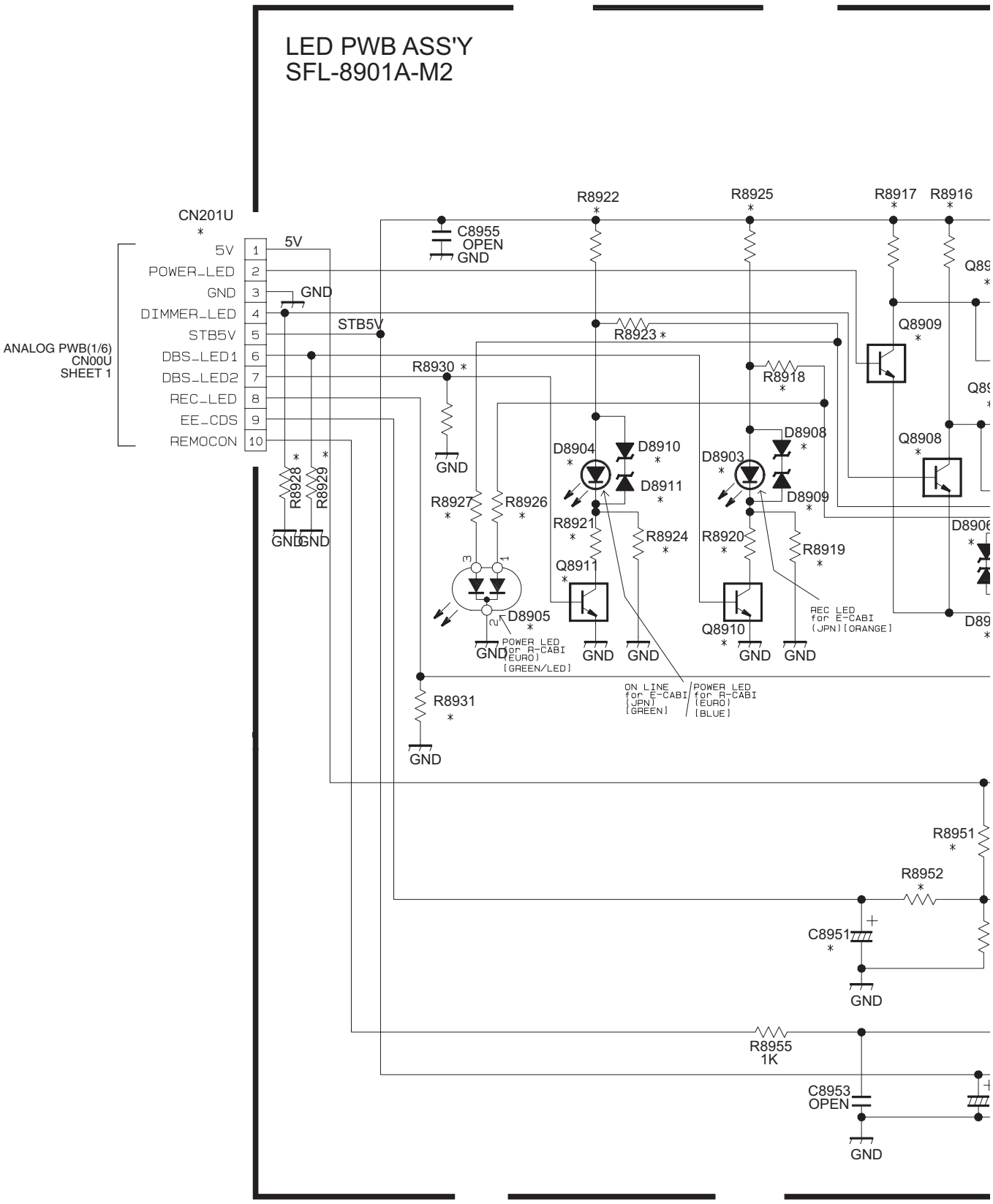
LED PWB ASS'Y
SFL-8901A-M2
CN201U
5V
POWER_LED
GND
DIMMER_LED
STB5V
DBS_LED1
DBS_LED2
REC_LED
EE_CDS
REMOCON
ANALOG PWB(1/6)
CN00U
SHEET 1
C8955
OPEN
R8922
R8925
R8917
R8916
R8923
R8930
R8918
R8928
R8929
R8927
R8926
R8921
R8924
R8920
R8919
D8904
D8910
D8911
D8903
D8908
D8909
D8905
Q8909
Q8908
Q8911
Q8910
POWER LED
for R-CABI
(EURO)
[GREEN/LED]
REC LED
for E-CABI
(JPN)[ORANGE]
ON LINE
for E-CABI
(JPN)
[GREEN]
POWER LED
for R-CABI
(EURO)
[BLUE]
R8931
R8951
R8952
C8951
R8955
1K
C8953
OPEN

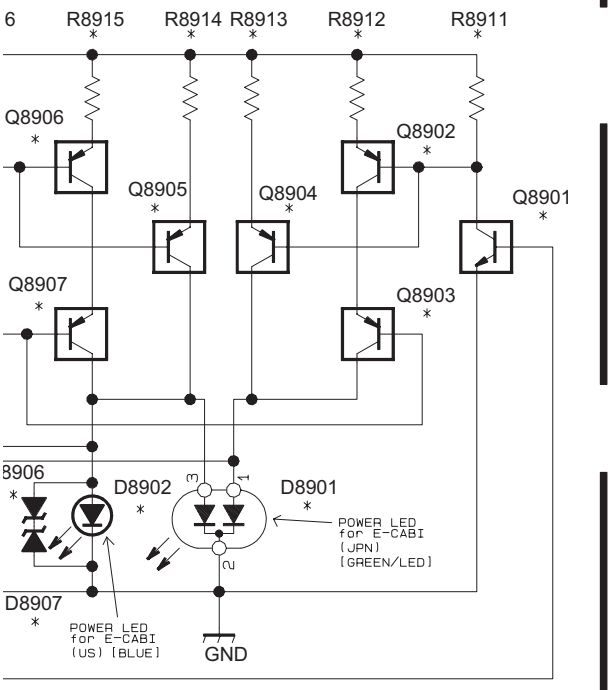

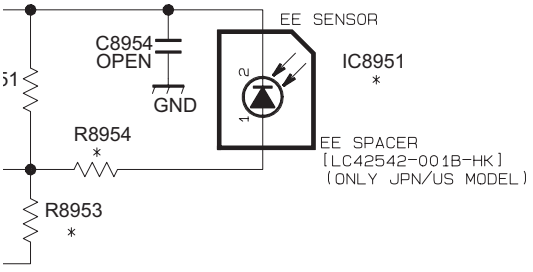

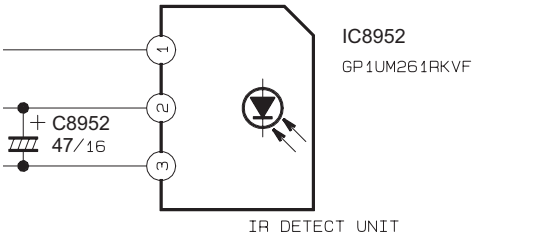

*DIFFERENCE LIST

NOTE	US 32/37	NON-IDTV 26/32/37	JPN 26/32/37	IDTV 26/32/37	US (XM57) 32
ASSY NO.	SFL-8901A	SFL-8902A	SFL-8903A	SFL-8904A	SFL-8905A
	OLLC10556	OLLC10387	OLLC10556 -02	OLLC10387 -02	OLLC10556 -03
D8901	OPEN	OPEN	SML72420C-T	OPEN	OPEN
D8902	SEL5E20C-T	OPEN	OPEN	OPEN	SEL5E20C-T
D8903	OPEN	OPEN	SEL5920A-T	OPEN	OPEN
D8904	OPEN	SEL5E20C-T	SEL5420E-T	OPEN	OPEN
D8905	OPEN	OPEN	OPEN	SML72420C-T	OPEN
D8906	MA8068-X	OPEN	OPEN	OPEN	MA8068-X
D8907	MA8068-X	OPEN	OPEN	OPEN	MA8068-X
D8908	OPEN	OPEN	OPEN	OPEN	OPEN
D8909	OPEN	OPEN	OPEN	OPEN	OPEN
D8910	OPEN	MA8068-X	OPEN	OPEN	OPEN
D8911	OPEN	MA8068-X	OPEN	OPEN	OPEN
Q8901	OPEN	OPEN	RT1N241C-X	RT1N241C-X	OPEN
Q8902	OPEN	OPEN	OPEN	OPEN	OPEN
Q8903	OPEN	OPEN	OPEN	OPEN	OPEN
Q8904	OPEN	OPEN	RT1P440C-X	RT1P440C-X	OPEN
Q8905	RT1P440C-X	RT1P440C-X	RT1P440C-X	RT1P440C-X	RT1P440C-X
Q8906	RT1P440C-X	OPEN	OPEN	OPEN	RT1P440C-X
Q8907	RT1P440C-X	OPEN	OPEN	OPEN	RT1P440C-X
Q8908	RT1N241C-X	OPEN	OPEN	OPEN	RT1N241C-X
Q8909	RT1N241C-X	RT1N241C-X	RT1N241C-X	RT1N241C-X	RT1N241C-X
Q8910	OPEN	OPEN	RT1N241C-X	OPEN	OPEN
Q8911	OPEN	OPEN	RT1N241C-X	OPEN	OPEN
R8911	OPEN	OPEN	10K	10K	OPEN
R8912	OPEN	OPEN	OPEN	OPEN	OPEN
R8913	OPEN	OPEN	150	330	OPEN
R8914	270	330	150	330	270
R8915	150	OPEN	OPEN	OPEN	150
R8916	10K	OPEN	OPEN	OPEN	10K
R8917	10K	10K	10K	10K	10K
R8918	OPEN	OPEN	OPEN	OPEN	OPEN
R8919	OPEN	OPEN	OPEN	OPEN	OPEN
R8920	OPEN	OPEN	150	OPEN	OPEN
R8921	OPEN	OPEN	150	OPEN	OPEN
R8922	OPEN	OPEN	0	OPEN	OPEN
R8923	OPEN	0	OPEN	OPEN	OPEN
R8924	OPEN	0	OPEN	OPEN	OPEN
R8925	OPEN	OPEN	0	OPEN	OPEN
R8926	OPEN	OPEN	OPEN	0	OPEN
R8927	OPEN	OPEN	OPEN	0	OPEN
R8928	OPEN	OPEN	0	OPEN	OPEN
R8929	0	OPEN	OPEN	OPEN	0
R8930	0	OPEN	OPEN	OPEN	0
R8931	0	OPEN	OPEN	OPEN	0
IC8951	S9648	OPEN	S9648	OPEN	OPEN
R8951	150K	OPEN	150K	OPEN	OPEN
R8952	100	OPEN	100	OPEN	0
R8953	33K	OPEN	33K	OPEN	0
R8954	15K	OPEN	15K	OPEN	OPEN
C8951	NEHL1EM-226X	OPEN	NEHL1EM-226X	OPEN	OPEN
CN201U	QGA1217F1 -10X	QGA1217F1 -10X	QGA1217F1 -10X	QGA1217F1 -10X	QGA1217F1 -10X

c30205001a001_0410_1/1_0.0

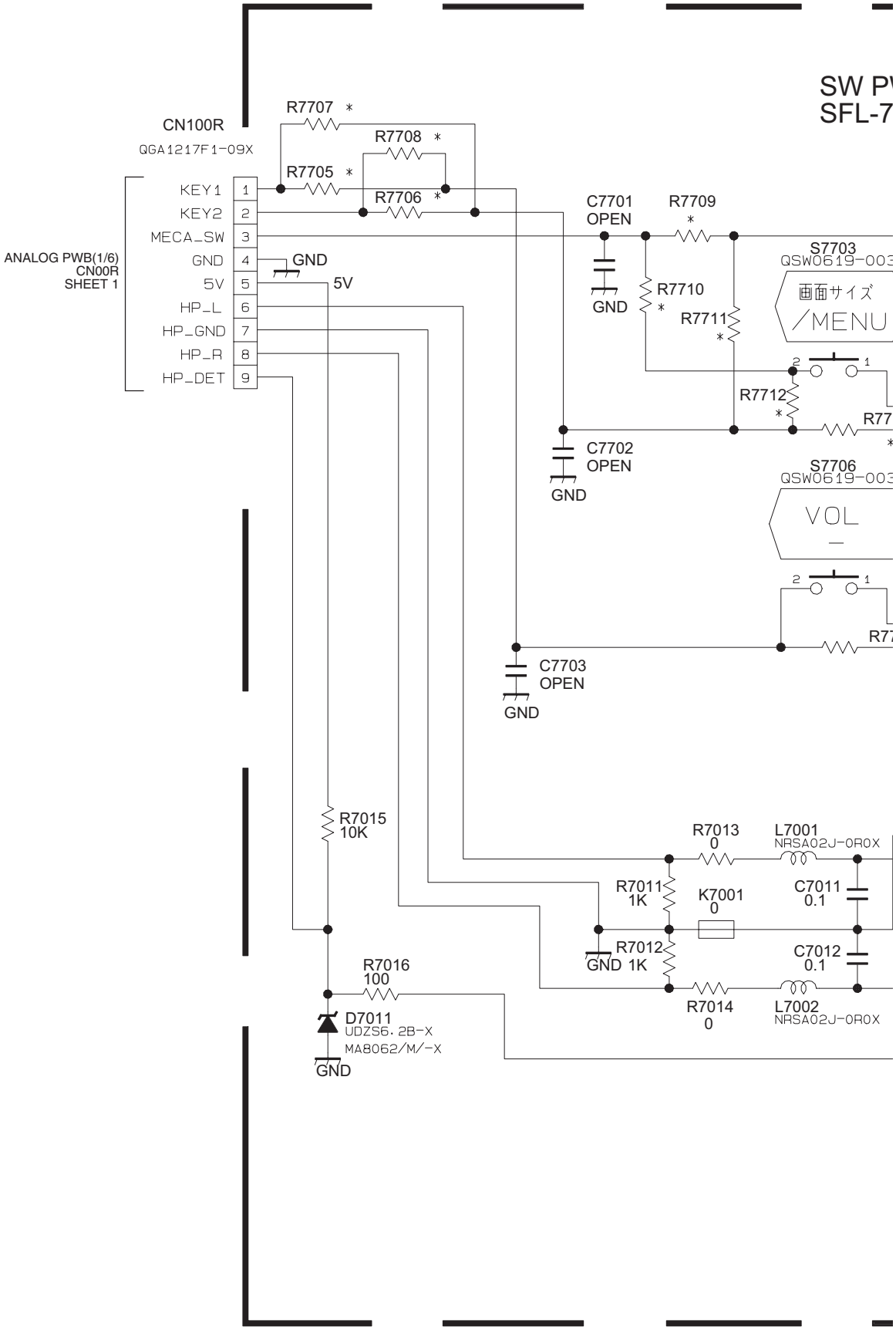
SW P
SFL-7
CN100R
QGA1217F1-09X
ANALOG PWB(1/6)
CN00R
SHEET 1
KEY1
KEY2
MECA_SW
GND
5V
HP_L
HP_GND
HP_R
HP_DET
R7707 *
R7708 *
R7705 *
R7706 *
C7701
OPEN
R7709
*
R7710
*
R7711
*
S7703
QSW0619-003
画面サイズ
/MENU
R7712
*
C7702
OPEN
S7706
QSW0619-003
VOL
–
C7703
OPEN
R7015
10K
R7013
0
L7001
NRSA02J-0R0X
R7011
1K
K7001
0
C7011
0.1
R7012
1K
C7012
0.1
R7016
100
R7014
0
L7002
NRSA02J-0R0X
D7011
UDZS6.2B-X
MA8062/M/-X

PWB ASS'Y
.-7207A-M2

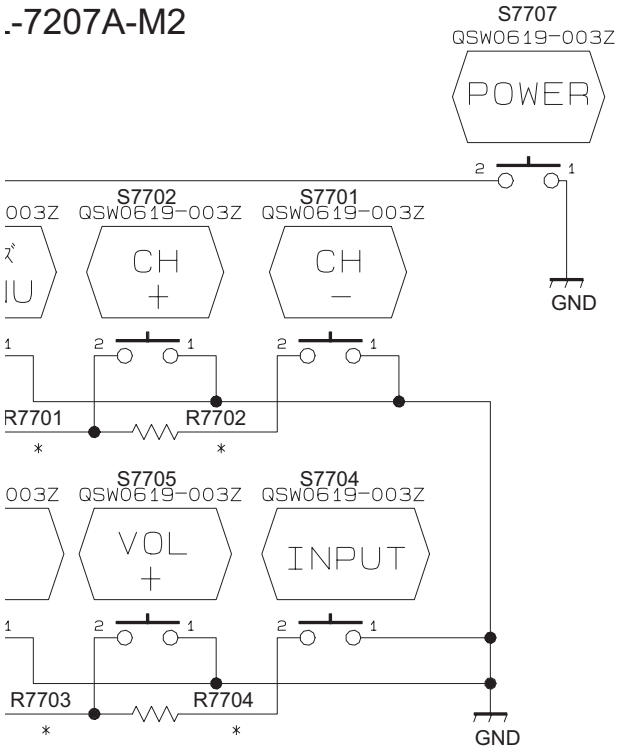

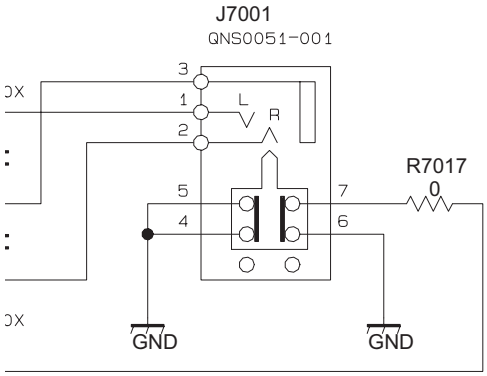

*DIFFERENCE LIST

NOTE	IDTV26/32/37 NON-IDTV 26/37/37 ASIA32	US	JPN
ASSY No.	SFL-7206A SFL-7209A	SFL-7207A	SFL-7208A
	QLLC09105 -04/-05	QLLC10557	QLLC10557 -02
R7701	4.7K	5.6K	5.6K
R7702	8.2K	15K	15K
R7703	4.7K	5.6K	5.6K
R7704	8.2K	15K	15K
R7705	OPEN	0	0
R7706	OPEN	0	0
R7707	0	OPEN	OPEN
R7708	0	OPEN	OPEN
R7709	OPEN	0	0
R7710	0	OPEN	OPEN
R7711	0	OPEN	OPEN
R7712	OPEN	0	0

c30197001c001_0410_1/1_0.0

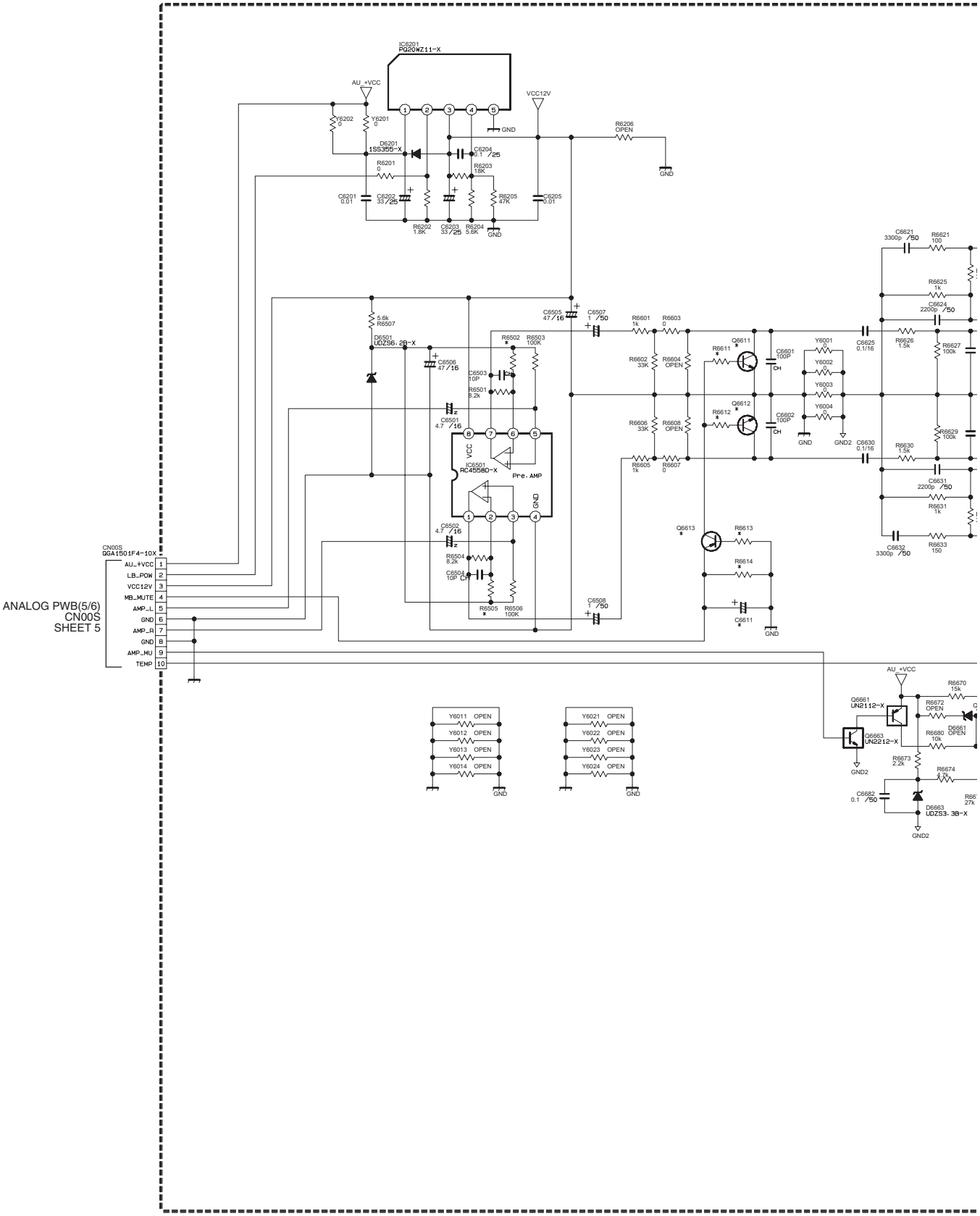
IC5201
PQ20WZ11-X
AU_+VCC
VCC12V
GND
R6206
OPEN
D6201
1SS355-X
R6201
0
R6203
18K
C6201
0.01
C6202
33/25
R6205
47K
C6205
0.01
R6202
1.8K
C6203
33/25
R6204
5.6K
C6204
0.1/25
R6621
100
C6621
3300p/50
R6625
1k
C6624
2200p/50
R6626
1.5k
R6627
100k
C6625
0.1/16
R6629
100k
R6630
1.5k
C6630
0.1/16
C6631
2200p/50
R6631
1k
C6632
3300p/50
R6633
150
5.6k
R6507
D6501
UDZS6.2B-X
C6505
47/16
C6507
1/50
R6601
1k
R6603
0
R6602
33K
R6604
OPEN
R6606
33K
R6608
OPEN
R6605
1k
R6607
0
Q6611
R6611
C6601
100P
Q6612
R6612
C6602
100P
Y6001
0
Y6002
0
Y6003
0
Y6004
0
R6502
R6503
100K
C6506
47/16
C6503
10P
R6501
8.2k
C6501
4.7/16
IC6501
RC4558D-X
Pre-AMP
C6502
4.7/16
R6504
8.2k
C6504
10P
R6505
R6506
100K
C6508
1/50
Q6613
R6613
R6614
C6611
CN00S
GGA1501F4-10X
AU_+VCC 1
LB_POW 2
VCC12V 3
MB_MUTE 4
AMP_L 5
GND 6
AMP_R 7
GND 8
AMP_MU 9
TEMP 10
ANALOG PWB(5/6)
CN00S
SHEET 5
Y6011 OPEN
Y6012 OPEN
Y6013 OPEN
Y6014 OPEN
Y6021 OPEN
Y6022 OPEN
Y6023 OPEN
Y6024 OPEN
Q6661
UN2112-X
Q6663
UN2212-X
R6670
15k
R6672
OPEN
R6680
10k
D6661
OPEN
R6673
2.2k
R6674
4.7k
C6662
0.1/50
D6663
UDZS3.3B-X
GND2

D-AMP PWB ASS'Y
SFL-6301A-M2

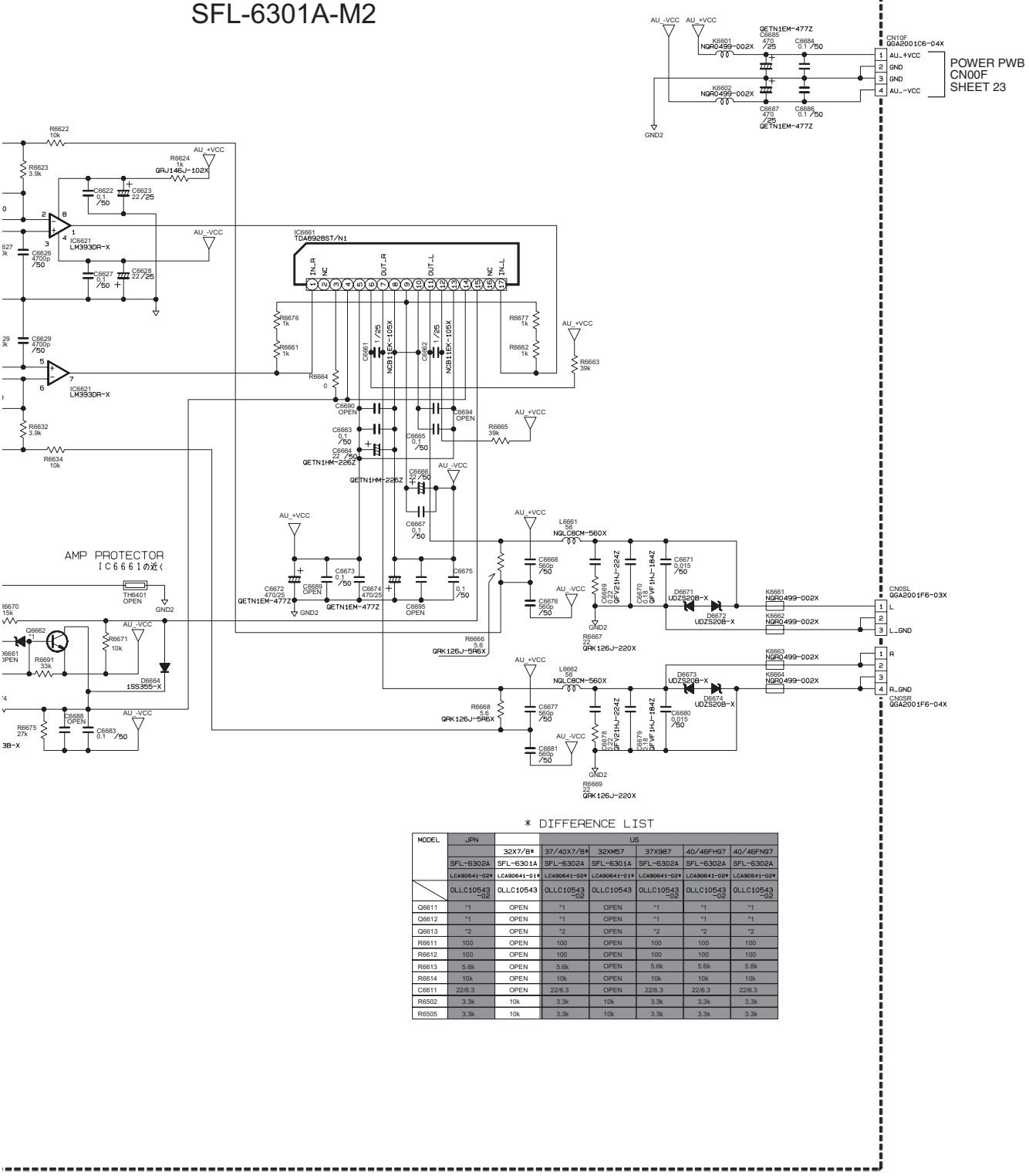

* DIFFERENCE LIST

MODEL	JPN		US				
		32X7/8*	37/40X7/8*	32XM57	37X987	40/46FH97	40/46FN97
	SFL-6302A	SFL-6301A	SFL-6302A	SFL-6301A	SFL-6302A	SFL-6302A	SFL-6302A
	LCA90641-02*	LCA90641-01*	LCA90641-02*	LCA90641-01*	LCA90641-02*	LCA90641-02*	LCA90641-02*
	QLLC10543-02	QLLC10543	QLLC10543-02	QLLC10543	QLLC10543-02	QLLC10543-02	QLLC10543-02
Q6611	*1	OPEN	*1	OPEN	*1	*1	*1
Q6612	*1	OPEN	*1	OPEN	*1	*1	*1
Q6613	*2	OPEN	*2	OPEN	*2	*2	*2
R6611	100	OPEN	100	OPEN	100	100	100
R6612	100	OPEN	100	OPEN	100	100	100
R6613	5.6k	OPEN	5.6k	OPEN	5.6k	5.6k	5.6k
R6614	10k	OPEN	10k	OPEN	10k	10k	10k
C6611	22/6.3	OPEN	22/6.3	OPEN	22/6.3	22/6.3	22/6.3
R6502	3.3k	10k	3.3k	10k	3.3k	3.3k	3.3k
R6505	3.3k	10k	3.3k	10k	3.3k	3.3k	3.3k

c10460001a001_0410_1/1_0.0

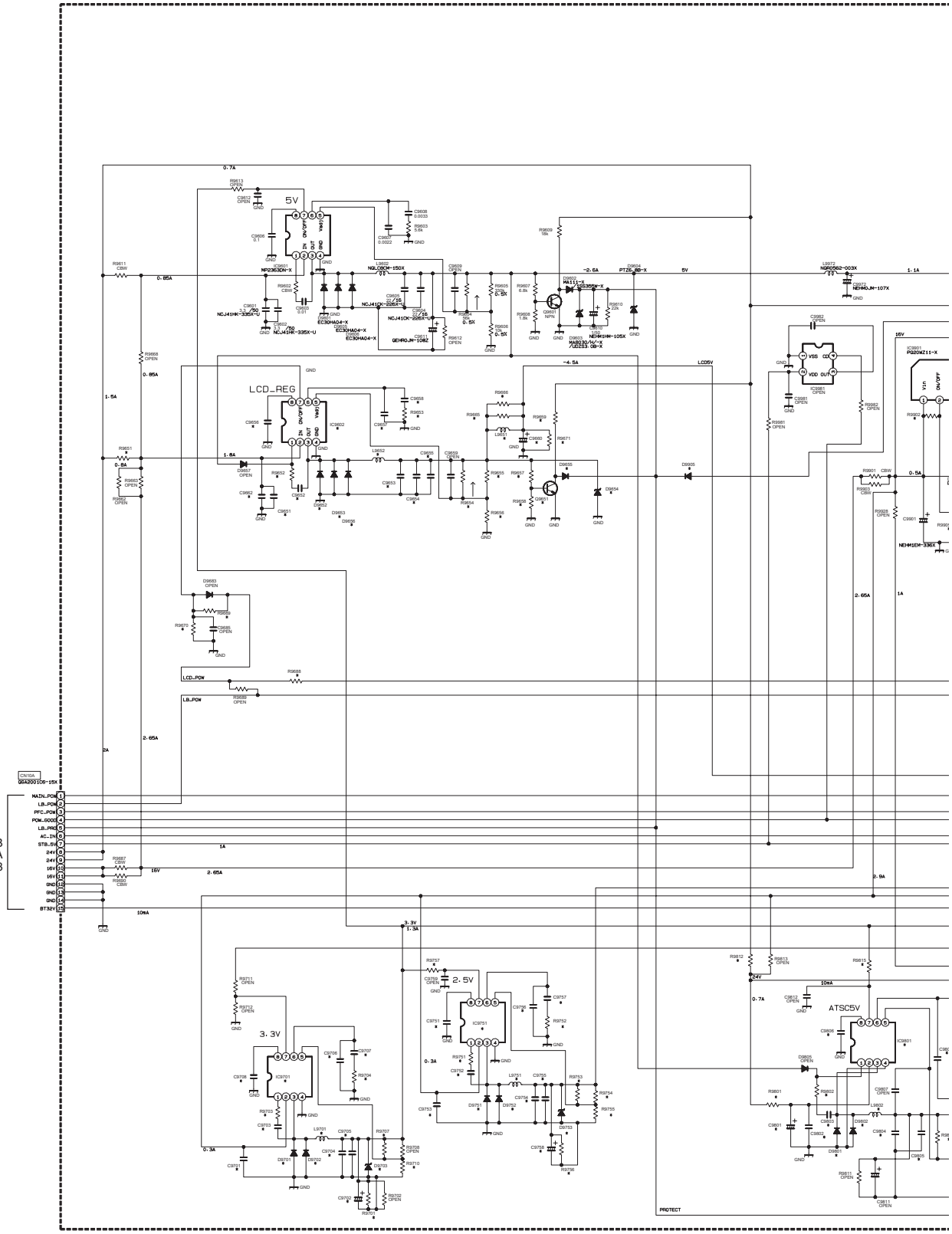
POWER PWB
CN00A
SHEET 23
LCD_REG
5V
3.3V
2.5V
ATSC5V
LCD_POW
LB_POW
PROTECT

DC-DC POWER PWB ASS'Y
SFL-9154A-M2

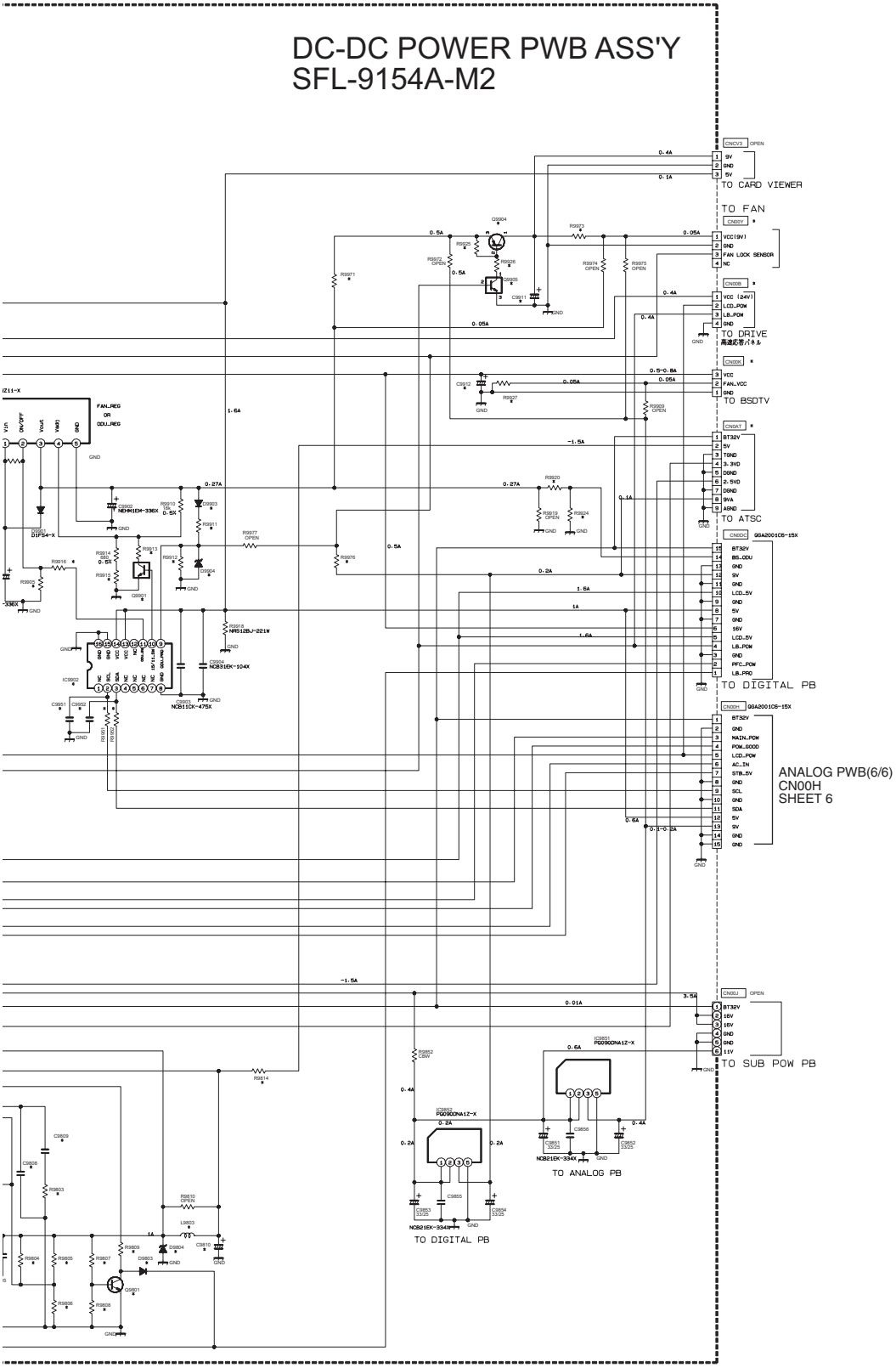

* DIFFERENCE LIST

NOTE-	US32	JPN32	JPN26
MODEL	LC-32A67 LC-32D67 LC-32X67 LT-32X67	LT-32L65	LT-26LC60
ASSY NO.	LCA3GE39 -01A	LCA3GE39 -05A	LCA3GE39 -02A
SYNC	DLLC10539 -00	DLLC10604 -00	DLLC10604 -00
CONNECTOR	CN00Y QSA2001C6 -15X	OPEN	OPEN
	CN00B OPEN	QSA2001C6 -15X	OPEN
	CN00K OPEN	QSA2001C6 -15X	QSA2001C6 -15X
	CN00AT QSA2001C6 -15X	OPEN	OPEN
LCD5V	IC9602 MP2363CN-X	OPEN	MP2363CN-X
	Q9851 NPN	OPEN	NPN
	D9852 EC30HA04-X	OPEN	EC30HA04-X
	D9853 EC30HA04-X	OPEN	EC30HA04-X
	D9854 PTZ16B-X	OPEN	PTZ6.8B-X
	D9855 MA111D-X	OPEN	MA111D-X
	D9856 EC30HA04-X	OPEN	EC30HA04-X
	L9851 NQR0502 -101K	OPEN	NQR0502 -101K
	L9852 NQL2R0M -R68KV	OPEN	NQL2R0M -R68KV
	R9851 CBW	OPEN	CBW
	R9852 CBW	OPEN	CBW
	R9853 5.6k	OPEN	5.6k
	R9854 220k 0.5%	OPEN	33k 0.5%
	R9855 270k 0.5%	OPEN	270k 0.5%
	R9856 10k 0.5%	OPEN	10k 0.5%
	R9857 6.8k	OPEN	6.8k
	R9858 1.8k	OPEN	1.8k
	R9859 18k	OPEN	18k
	R9865 OPEN	OPEN	OPEN
	R9866 OPEN	OPEN	OPEN
	R9869 4.7k	OPEN	4.7k
	R9870 100k	OPEN	100k
	R9871 NRSA02J -330X	OPEN	OPEN
	R9888 0	OPEN	0
	C9851 NCJ41HK -X5RV-1	OPEN	NCJ41HK -X5RV-1
	C9852 0.01	OPEN	0.01
	C9853 NCJ41EK -X5RV-1	OPEN	OPEN
	C9854 NCJ41EK -X5RV-1	OPEN	NCJ41EK -X5RV-1
	C9855 NCJ41EK -X5RV-1	OPEN	NCJ41EK -X5RV-1
	C9856 0.1	OPEN	0.1
	C9857 0.0022	OPEN	0.001
	C9858 0.0033	OPEN	0.0047
	C9860 NEW5E1H -682MX	OPEN	NEW5E1H -682MX
	C9862 NCJ41EK -X5RV-1	OPEN	NCJ41EK -X5RV-1
16V	IC9801 MP2363CN-X	OPEN	OPEN
	R9801 CBW	OPEN	OPEN
	R9802 0	OPEN	OPEN
	R9803 3.3k	OPEN	OPEN
	R9804 56k 0.5%	OPEN	OPEN
	R9805 270k 0.5%	OPEN	OPEN
	R9806 10k 0.5%	OPEN	OPEN
	R9807 6.8k	OPEN	OPEN
	R9808 1.8k	OPEN	OPEN
	R9809 18k	OPEN	OPEN
	R9812 CBW	OPEN	OPEN
	R9814 CBW	OPEN	OPEN
	R9815 33k	OPEN	OPEN
	C9801 NCJ41HK -X5RV-1	OPEN	OPEN
	C9802 NCJ41HK -X5RV-1	OPEN	OPEN
	C9803 0.01	OPEN	OPEN
	C9804 NCJ41EK -X5RV-1	OPEN	OPEN
	C9805 NCJ41EK -X5RV-1	OPEN	OPEN
	C9806 0.1	OPEN	OPEN
	C9808 NDC31HJ -101J	OPEN	OPEN
	C9809 0.01	OPEN	OPEN
	C9810 QERHDJM -102MZ	OPEN	OPEN
	D9801 EC30HA04-X	OPEN	OPEN
	D9802 EC30HA04-X	OPEN	OPEN
	D9803 MA111-X /1SS355-X	OPEN	OPEN
	D9804 PTZ5.6B-X	OPEN	OPEN
	L9802 NQL1R0M -1R0KX	OPEN	OPEN
	L9803 NQR0502 -101K	OPEN	OPEN
	Q9801 NPN	OPEN	OPEN
FAN OR ODU	IC9902	OPEN	M62320FP-X
	Q9901 OPEN	UN5213-X	UN5213-X
	D9903 OPEN	MA111-X /1SS355-X	MA111-X /1SS355-X
	D9904 OPEN	UDZ5.1B	UDZ5.1B
	D9905 MA111-X /1SS355-X	OPEN	OPEN
	R9902 0	OPEN	OPEN
	R9905 OPEN	100k	100k
	R9911 OPEN	12k	12k
	R9912 OPEN	10k	10k
	R9913 OPEN	12k 0.5%	12k 0.5%
	R9915 6.8k 0.5%	4.7k 0.5%	4.7k 0.5%
	R9916 OPEN	10k	10k
	R9920 OPEN	CBW	CBW
	R9924 0	OPEN	OPEN
	R9951 OPEN	100	100
	R9952 OPEN	100	100
	C9951 OPEN	NDC31HJ -180J	NDC31HJ -180J
	C9952 OPEN	NDC31HJ -330J	NDC31HJ -330J
FAN	Q9904 2SB1188 -Z/AC-X	OPEN	OPEN
	R9925 47k	OPEN	OPEN
	R9926 NRSA02J -220X	OPEN	OPEN
	Q9905 UN5213-X /UMA4N-X	OPEN	OPEN
	C9911 NBZ0017 -104KX	OPEN	OPEN
	C9912 OPEN	NBZ0017 -104KX	NBZ0017 -104KX
	R9927 OPEN	0	0
	R9971 CBW	OPEN	OPEN
	R9973 CBW	OPEN	OPEN
	R9976 5.6k	OPEN	OPEN
	R9977 OPEN	OPEN	OPEN
3.3V	IC9701 MP2363CN-X	OPEN	OPEN
	R9701 NRSA02J -331X	OPEN	OPEN
	R9703 CBW	OPEN	OPEN
	R9704 3.3k	OPEN	OPEN
	R9707 27k 0.5%	OPEN	OPEN
	R9710 10k 0.5%	OPEN	OPEN
	C9701 NCJ41EK -X5RV-1	OPEN	OPEN
	C9702 QERHDJM -220MZ	OPEN	OPEN
	C9703 0.01	OPEN	OPEN
	C9704 NCJ41EK -X5RV-1	OPEN	OPEN
	C9705 NCJ41EK -X5RV-1	OPEN	OPEN
	C9706 NDC31HJ -101J	OPEN	OPEN
	C9707 0.01	OPEN	OPEN
	C9708 0.1	OPEN	OPEN
	L9701 NQL2R2M -1R0KX	OPEN	OPEN
	D9701 EC30HA03L -T	OPEN	OPEN
	D9702 EC30HA03L -T	OPEN	OPEN
	D9703 PTZ3.9B-X	OPEN	OPEN
2.5V	IC9751 MP2363CN-X	OPEN	OPEN
	R9751 CBW	OPEN	OPEN
	R9752 3.3k	OPEN	OPEN
	R9753 22k 0.5%	OPEN	OPEN
	R9754 100k 0.5%	OPEN	OPEN
	R9755 10k 0.5%	OPEN	OPEN
	R9756 NRSA02J -331X	OPEN	OPEN
	R9757 33k	OPEN	OPEN
	C9751 NCB31EK -334X	OPEN	OPEN
	C9752 0.01	OPEN	OPEN
	C9753 NCJ41EK -X5RV-1	OPEN	OPEN
	C9754 NCJ41EK -X5RV-1	OPEN	OPEN
	C9755 NCJ41EK -X5RV-1	OPEN	OPEN
	C9756 NDC31HJ -101J	OPEN	OPEN
	C9757 0.01	OPEN	OPEN
	C9758 QERHDJM -220MZ	OPEN	OPEN
	D9751 EC30HA03L -T	OPEN	OPEN
	D9752 EC30HA03L -T	OPEN	OPEN
	D9753 PTZ3.9B-X	OPEN	OPEN
	L9751 NQL2R2M -1R0KX	OPEN	OPEN

c10462001a001_0410_1/1_0.0

SD CARD PWB ASS'Y
SFL-1305A-M2

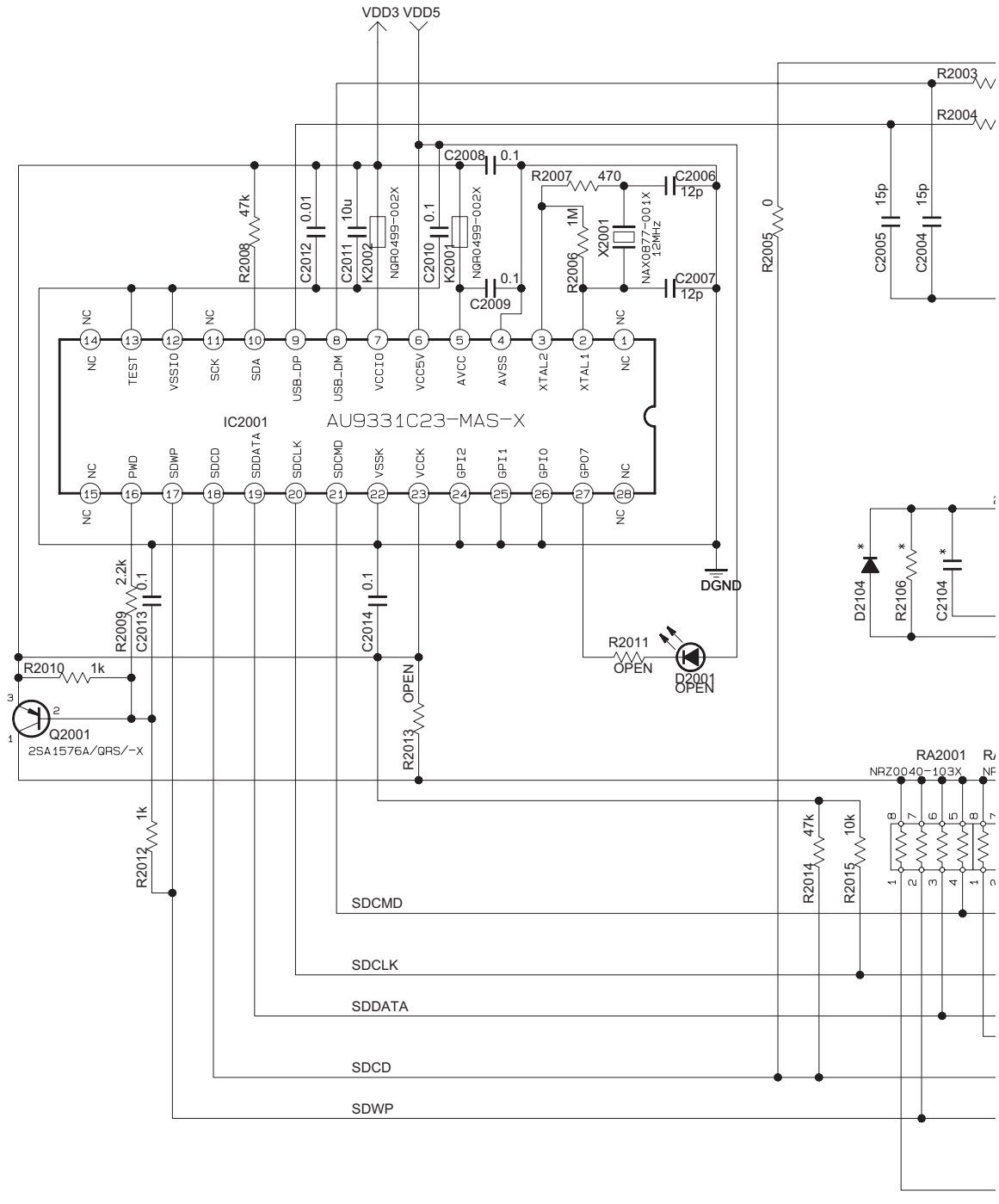

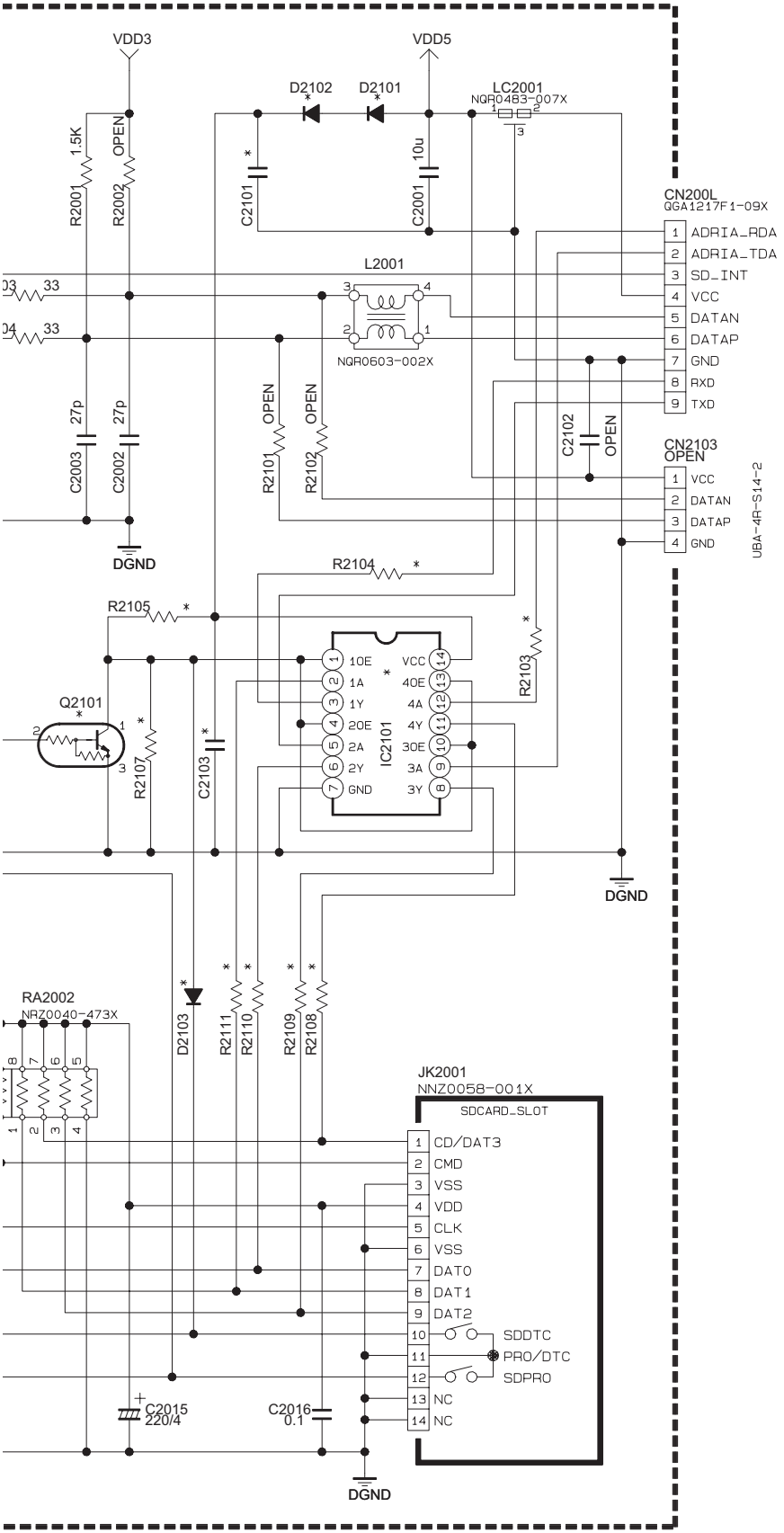

*DIFFERENCE LIST

NOTE	JPN	US
ASSY NO.	SFL-1304A	SFL-1305A
	OLLC10560	OLLC10560-02
IC2101	SN74LVC126APW-X	OPEN
Q2101	RT1N441C-X	OPEN
D2101	1SS355W-X	OPEN
D2102	1SS355W-X	OPEN
D2103	1SS355W-X	OPEN
D2104	1SS355W-X	OPEN
C2101	NCB11CK-225X	OPEN
C2103	NCF31CZ-104X	OPEN
C2104	NCF31AZ-105X	OPEN
R2103	33	OPEN
R2104	33	OPEN
R2105	10K	OPEN
R2106	1K	OPEN
R2107	47K	OPEN
R2108	33	OPEN
R2109	33	OPEN
R2110	33	OPEN
R2111	33	OPEN

c30206001a001_0410_1/1_0.0

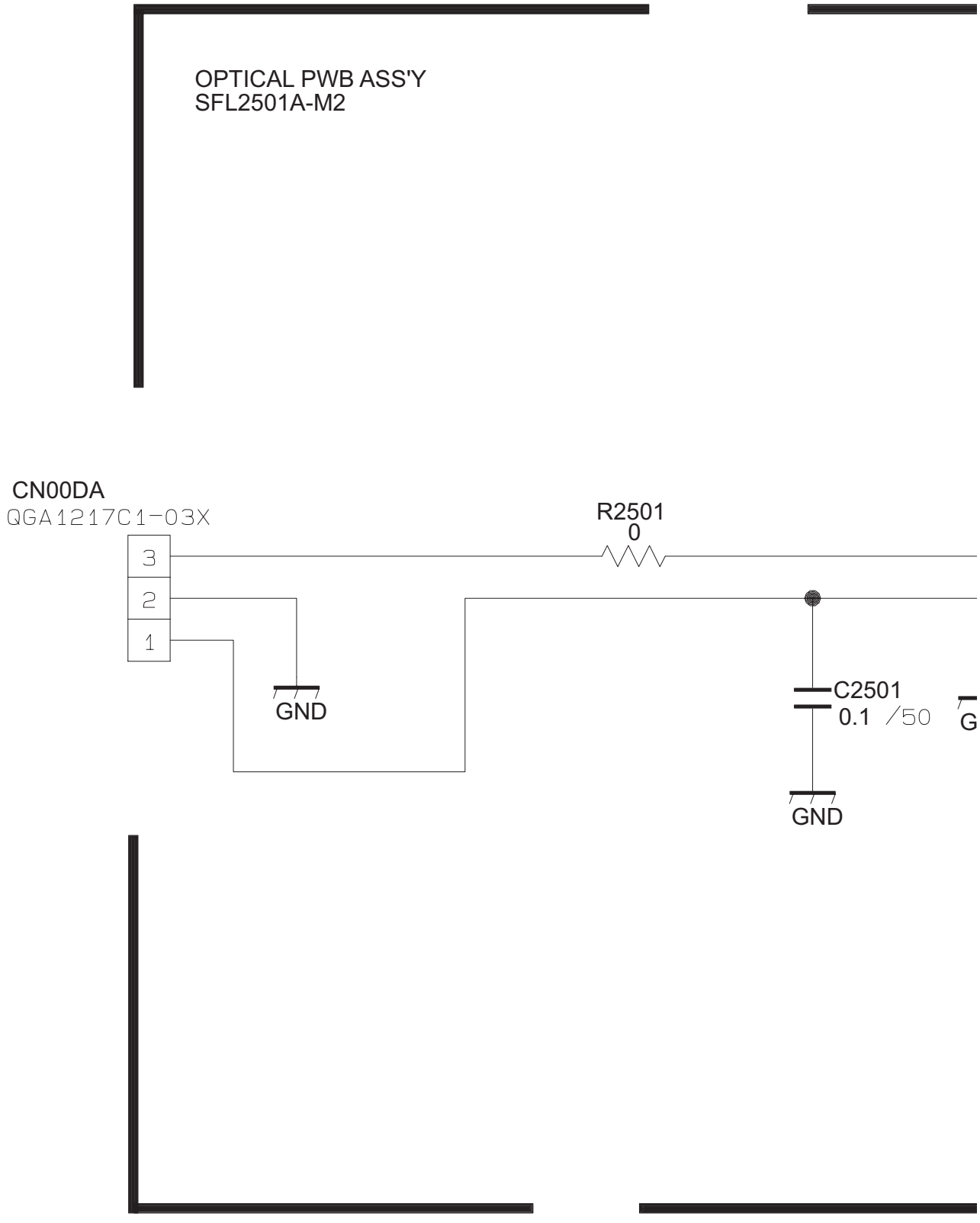
OPTICAL PWB ASS'Y
SFL2501A-M2
CN00DA
QGA1217C1-03X
3
2
1
R2501
0
GND
C2501
0.1 /50
G
GND

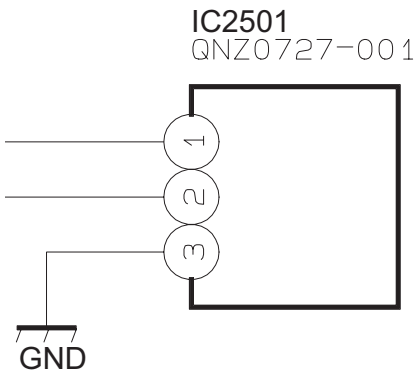

c40090a001_0427_1/1_0.0

PATTERN DIAGRAMS

ANALOG PWB PATTERN [SOLDER SIDE]

TOP

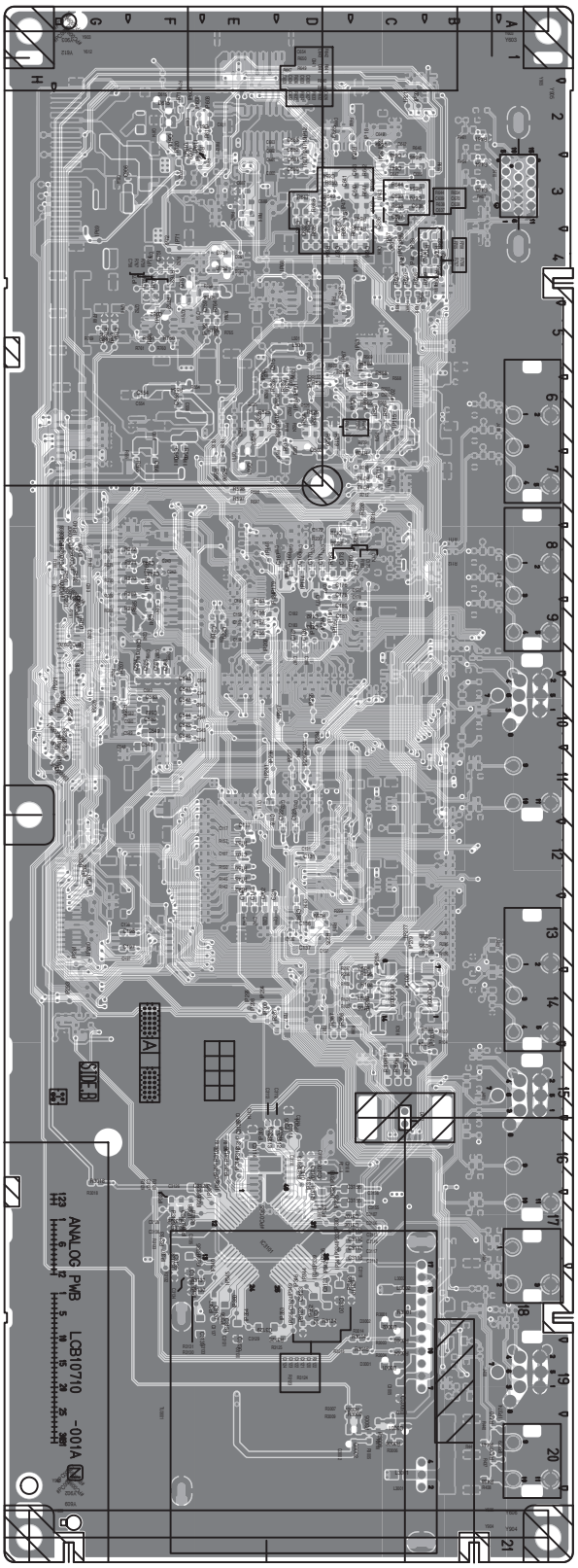

ANALOG PWB PATTERN [PARTS SIDE]

CAUTION :
FOR CONTINUED PROTECTION AGAINST FIRE HAZARD,
REPLACE ONLY WITH SAME TYPE AND RATED FUSE(S)
AND ROHM'S MFR'S TYPE CP(S).

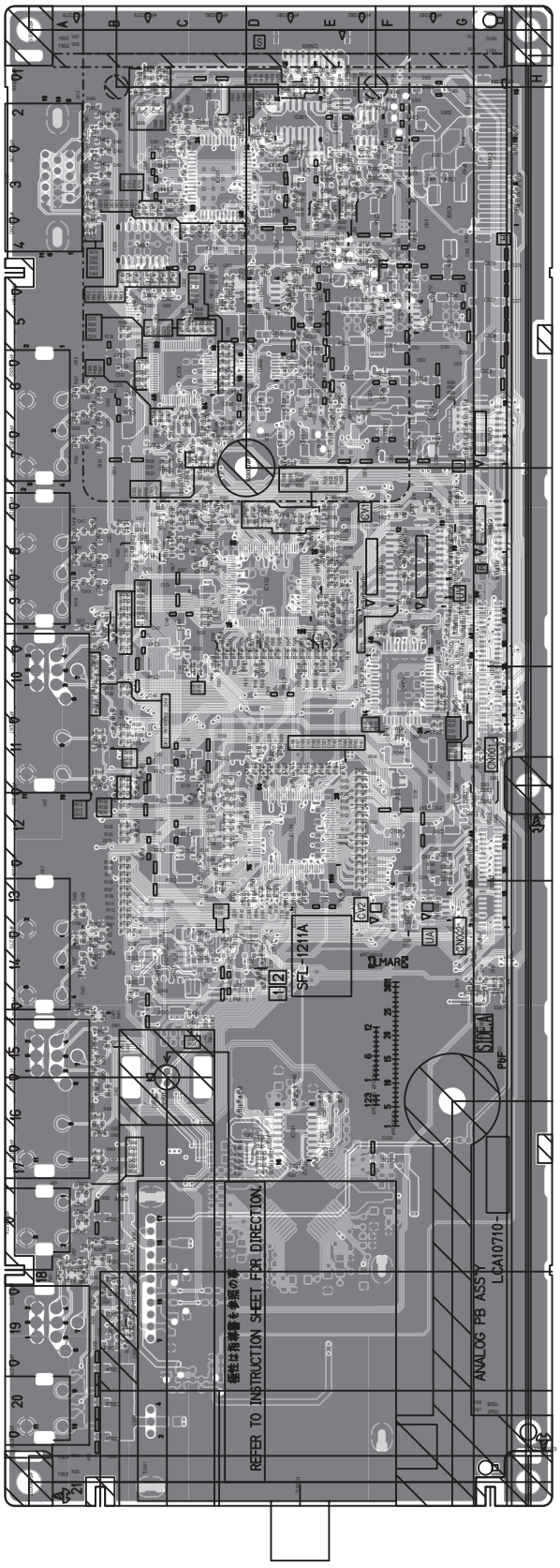

TOP

DIGITAL PWB PATTERN [SOLDER SIDE]

TOP

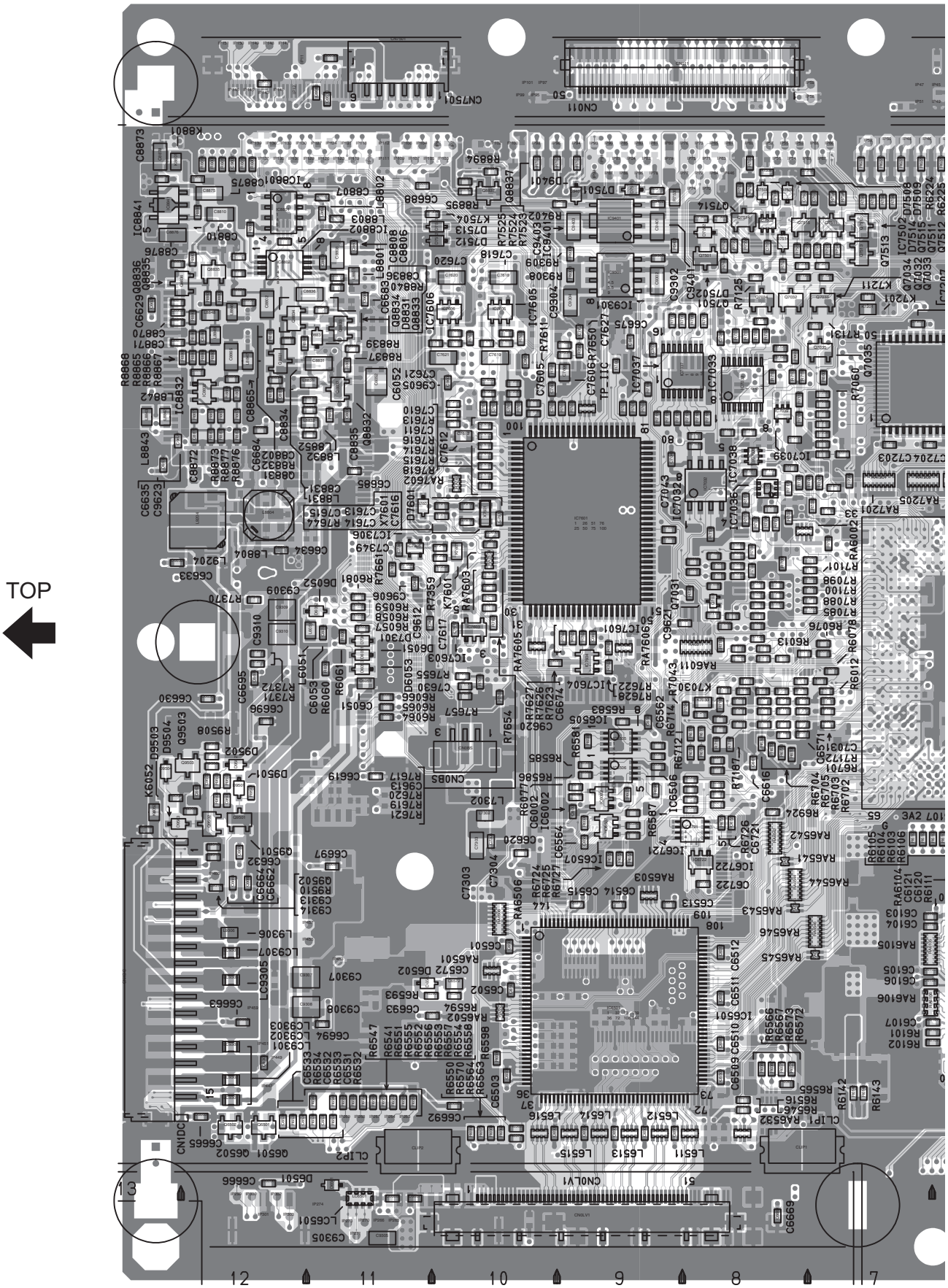

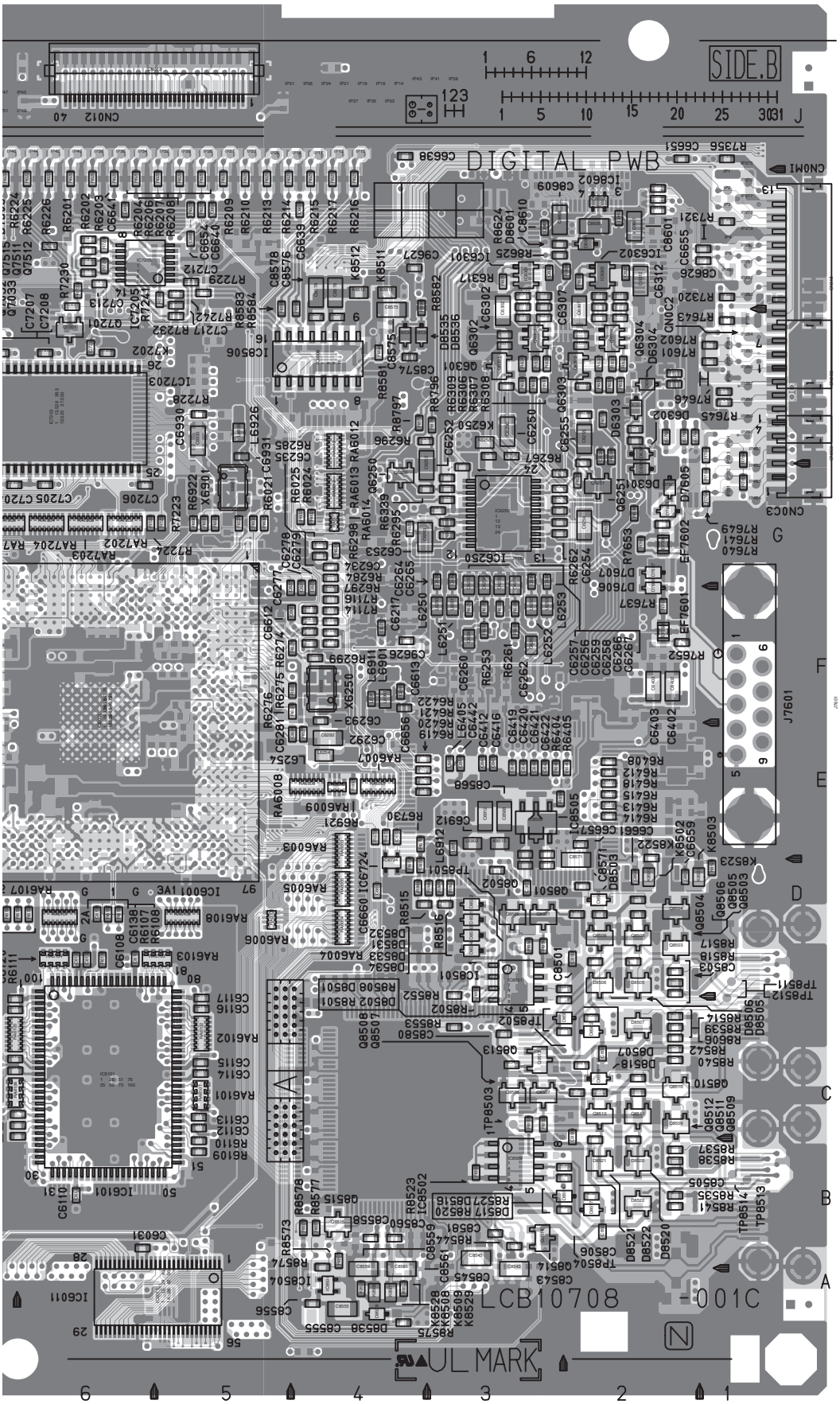
SIDE.B
DIGITAL PWB
LCB10708 -001C
UL MARK

DIGITAL PWB PATTERN [PARTS SIDE]

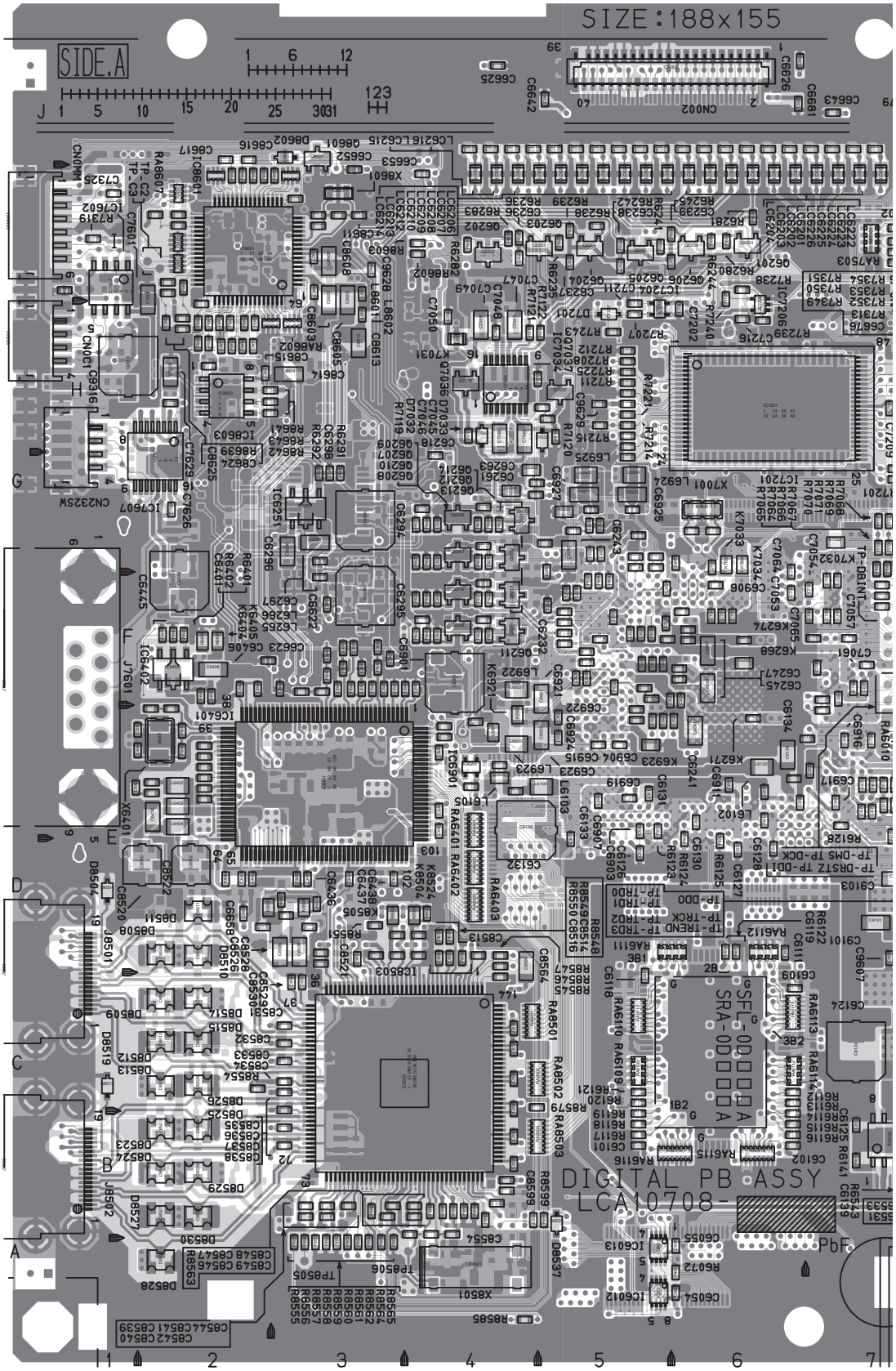

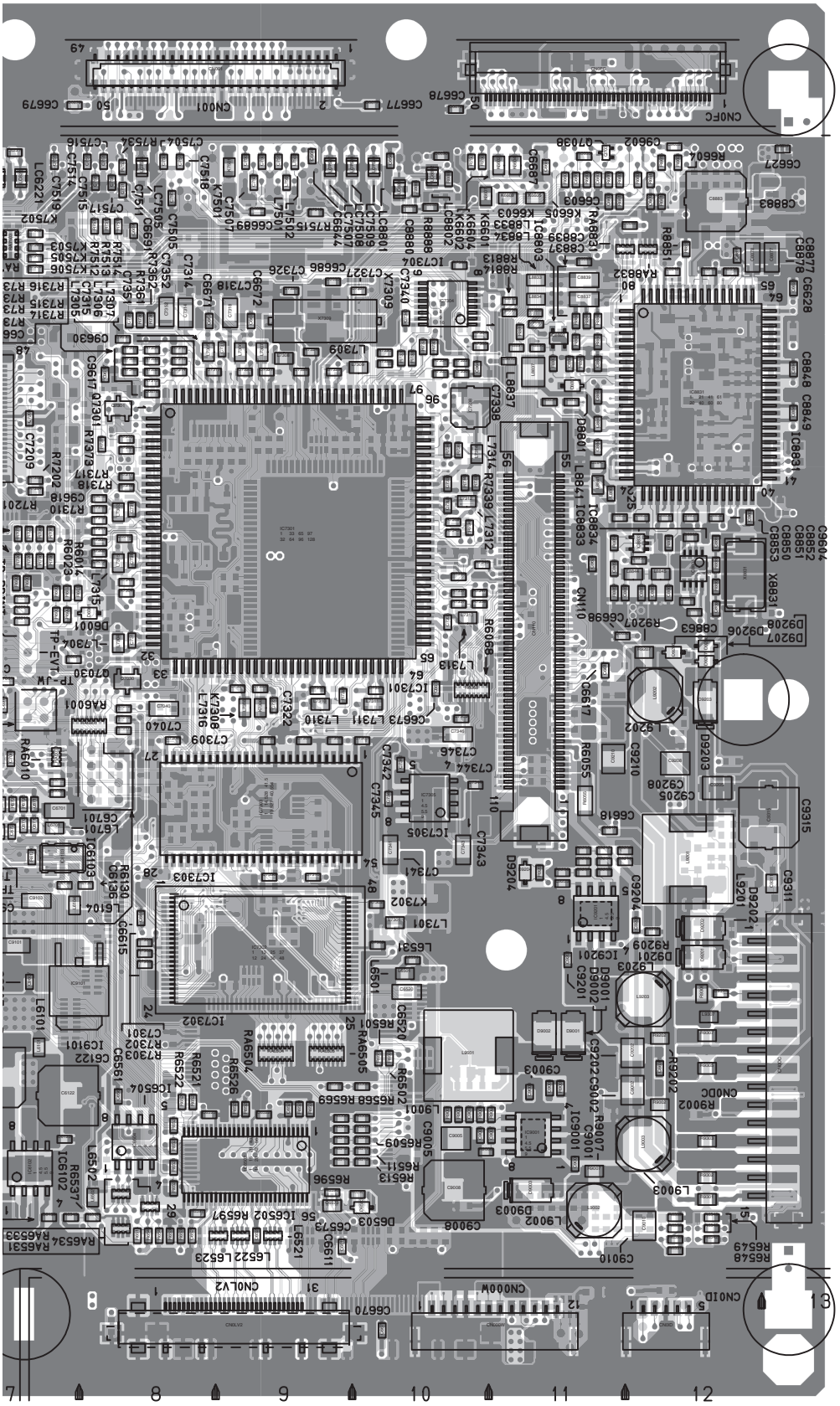

TOP

POWER PWB PATTERN [SOLDER SIDE]

TOP

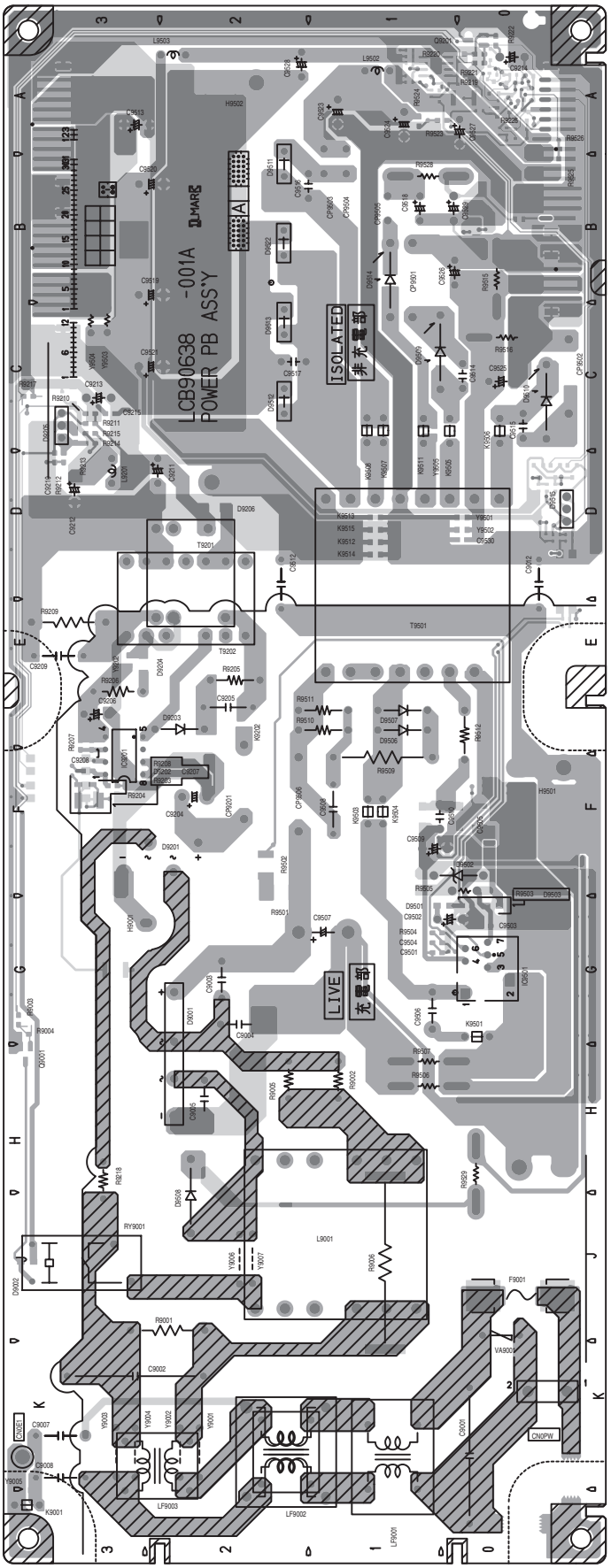

POWER PWB PATTERN [PARTS SIDE]

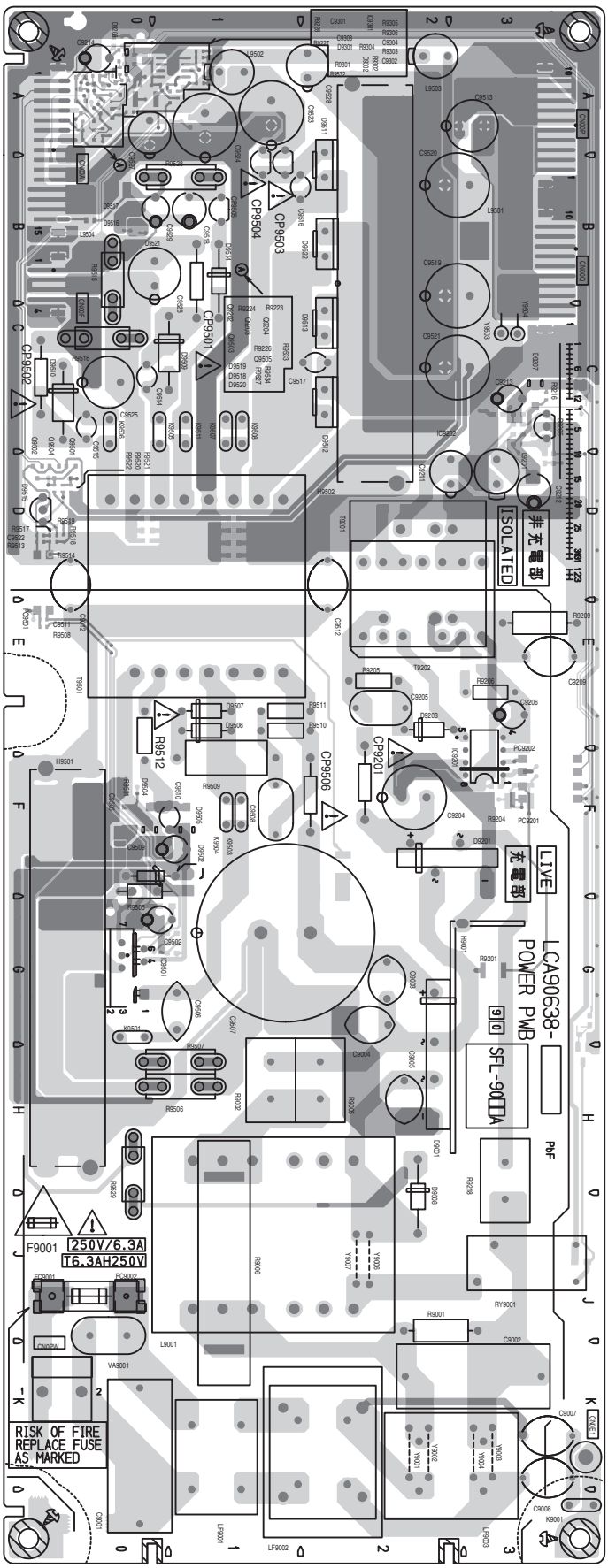

DC-DC PWB PATTERN [SOLDER SIDE]

TOP

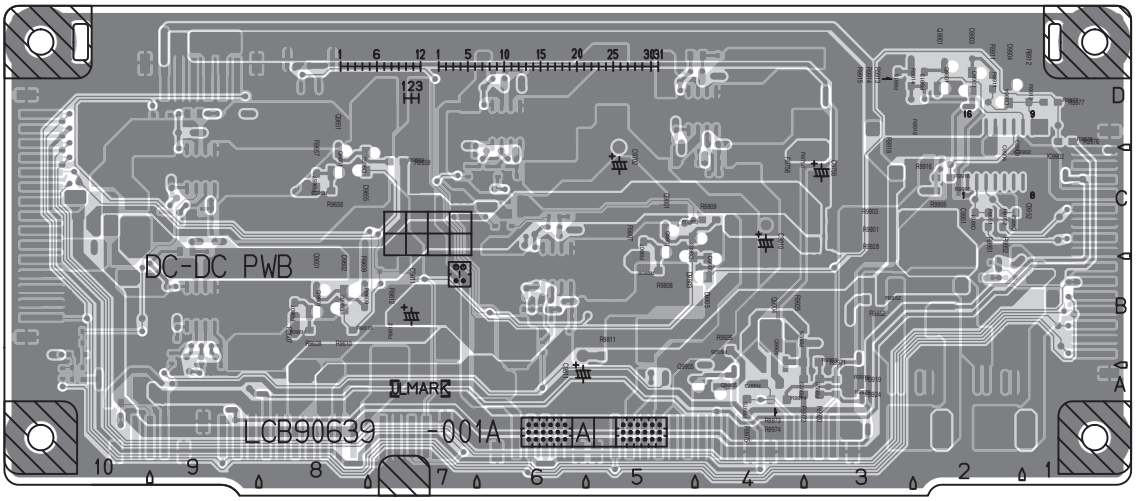

DC-DC PWB PATTERN [PARTS SIDE]

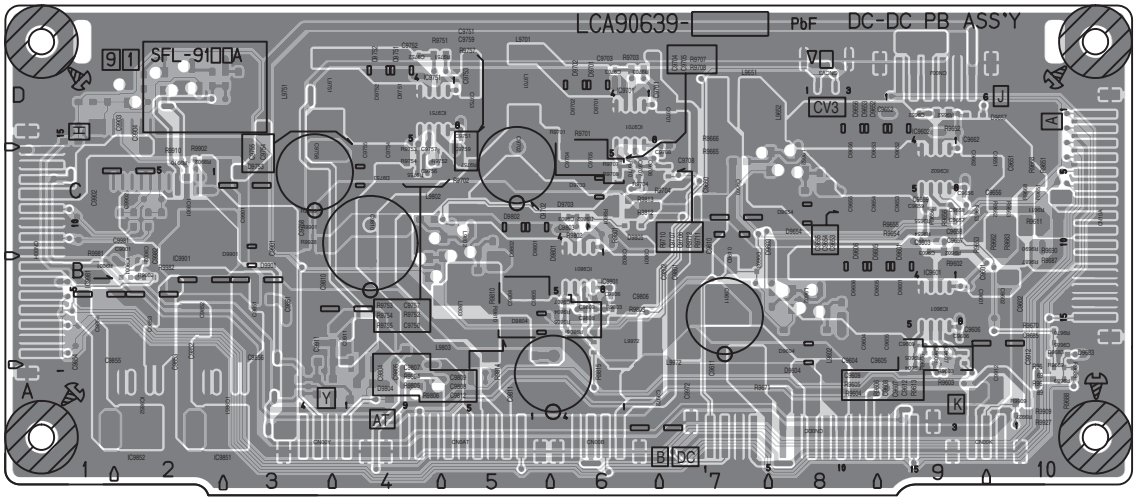

TOP

LED PWB PATTERN [SOLDER SIDE]

TOP

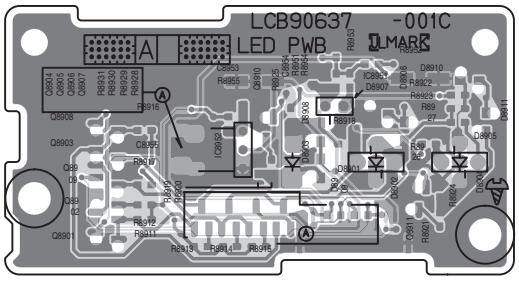

LED PWB PATTERN [PARTS SIDE]

TOP

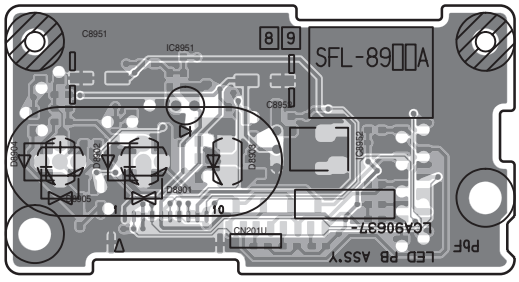

SW PWB PATTERN [SOLDER SIDE]

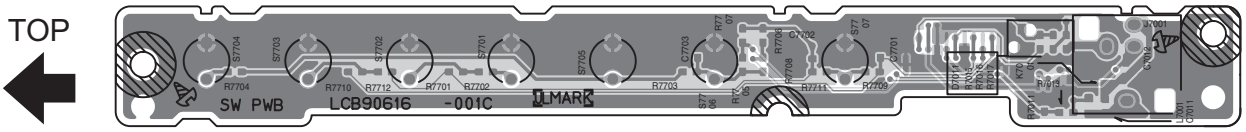

SW PWB PATTERN [PARTS SIDE]

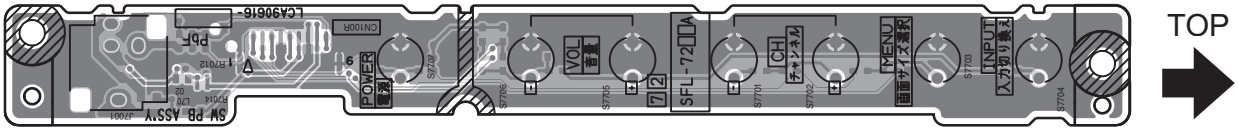

D-AMP PWB PATTERN [SOLDER SIDE]

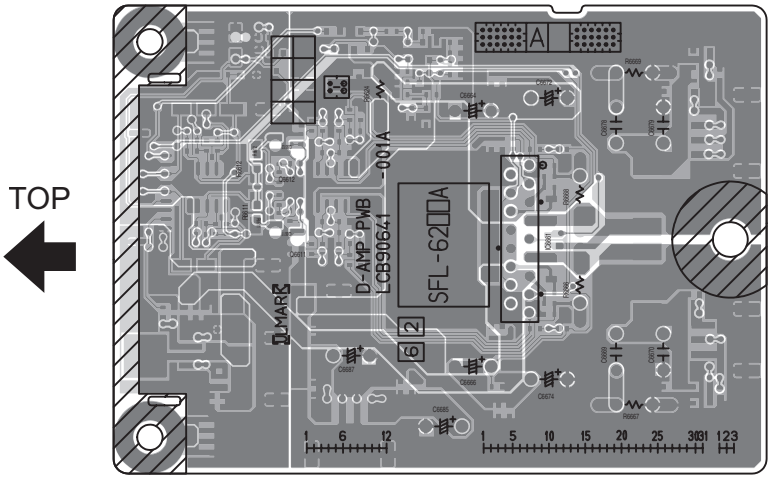

D-AMP PWB PATTERN [PARTS SIDE]

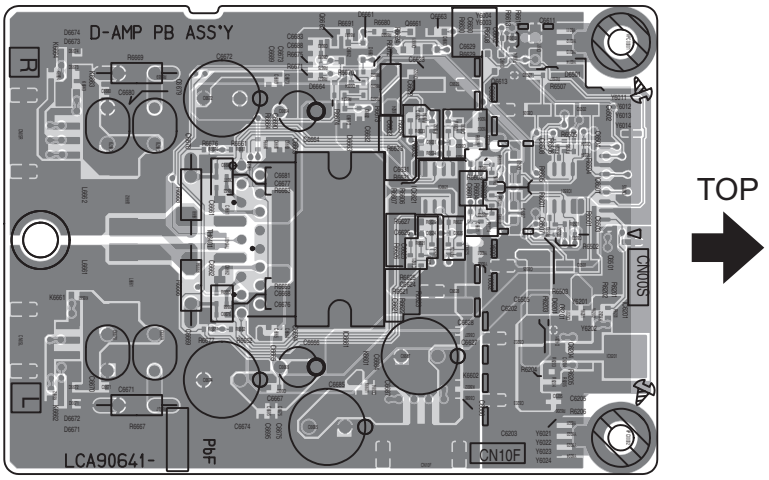

SD CARD PWB PATTERN [SOLDER SIDE]

TOP

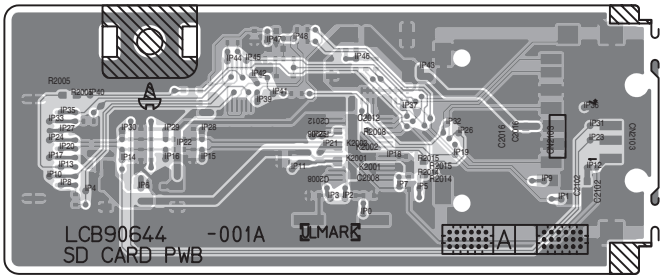

SD CARD PWB PATTERN [PARTS SIDE]

TOP

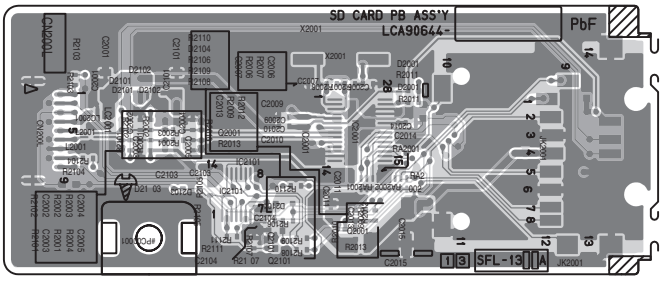

OPTICAL PWB PATTERN [SOLDER SIDE]

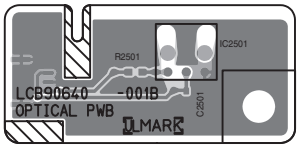

TOP

OPTICAL PWB PATTERN [PARTS SIDE]

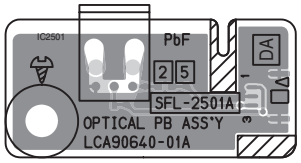

TOP

VOLTAGE CHARTS

<ANALOG PWB>

[P.2-7 - P.2-8]

MODE PIN NO.	DC (V)
IC101	
1	4.4
2	4.4
3	0
4	4.4
5	4.4
6	0
7	4.5
8	4.4
9	0
10	4.4
11	4.4
12	0
13	4.4
14	4.4
15	4.4
16	4.4
17	4.5
18	8.9
19	4.5
20	4.4
21	0
22	4.4
23	4.4
24	0
25	4.4
26	4.4
27	0
28	4.4
29	4.4
30	8.9
31	4.5
32	4.4
33	4.4
34	4.5
35	4.5
36	4.5
37	1.4
38	1.9
39	1.4
40	1.9
41	0
42	2.1
43	1.6
44	5.2
45	1.9
46	0
47	2.1
48	5.2
49	1.9
50	1.6
51	4.9
52	5.0
53	5.2
54	5.2
55	2.5
56	5.2
57	2.5
58	2.1
59	2.1
60	2.5
61	5.2
62	2.5
63	0.3
64	0
65	0
66	0
67	5.1
68	2.5
69	0.3
70	2.1
71	5.1
72	2.5
73	5.1
74	2.5
75	1.3
76	0.3
77	2.1
78	1.4
79	2.6
80	5.2
81	2.3
82	0
83	2.8
84	0
85	2.5
86	5.1
87	2.5
88	0.2
89	2.2
90	0
91	2.5
92	2.8
93	2.5
94	0.1
95	0.1
96	5.1

MODE PIN NO.	DC (V)
97	2.5
98	5.1
99	2.5
100	2.5
IC102	
1	0
2	2.4
3	2.5
4	2.4
5	2.5
6	2.4
7	2.5
8	2.4
9	0
10	2.4
11	2.2
12	2.4
13	0
14	0.3
15	0.3
16	0
17	2.4
18	0
19	2.4
20	0
21	2.4
22	0
23	0
24	4.9
25	4.9
26	0
27	3.4
28	3.3
29	0
30	0
31	5.2
32	1.4
33	0
34	0
35	0
36	0
37	3.5
38	3.4
39	0.2
40	0
41	0
42	2.2
43	1.0
44	0
45	1.0
46	2.3
47	1.9
48	1.9
49	3.0
50	5.2
51	5.1
52	1.9
53	2.0
54	3.0
55	2.6
56	2.5
57	5.2
58	0
59	0
60	2.2
61	0
62	0
63	5.2
64	2.5
65	2.5
66	2.4
67	2.5
68	2.5
69	2.5
70	2.4
71	5.1
72	2.4
73	5.1
74	2.4
75	0
76	0.3
77	0
78	2.4
79	0
80	2.1
81	0
82	0
83	0
84	0
85	0
86	2.4
87	0
88	2.4
89	2.8
90	2.4
91	0
92	0

MODE PIN NO.	DC (V)
93	0.2
94	2.4
95	0
96	2.4
97	0
98	0
99	0
100	5.1
IC106	
1	4.4
2	0
3	4.4
4	4.4
5	7.3
6	0
7	0
8	4.4
9	0.1
10	4.4
11	4.4
12	0
13	0
14	0
Q101	
E	0
C	0
B	7.3
Q102	
E	0
C	7.3
B	0.1
Q106	
S	3.3
D	3.0
G	4.9
Q107	
S	3.3
D	3.1
G	5.0
Q108	
E	0
C	0
B	0.6
Q109	
E	2.6
C	0
B	1.9
Q110	
E	2.2
C	0
B	1.4
Q111	
E	2.2
C	0
B	1.3
Q112	
E	1.8
C	0
B	1.1
Q113	
E	2.3
C	5.1
B	3.0
Q281	
E	8.8
C	0
B	8.8
CN0UA	
1	0
2	0
3	0
CN0UV	
1	0
2	0.1
3	0
4	1.1
5	0
6	0.9
7	0
8	1.1
9	0
10	0
11	0
12	0
13	0

[P.2-9 - P.2-10]

MODE PIN NO.	DC (V)
Q431	
E	0
C	0
B	0
Q432	
E	0
C	0
B	0
Q433	
E	0
C	0
B	0

[P.2-11 - P.2-12]

MODE PIN NO.	DC (V)
IC381	
1	0
2	4.8
3	4.9
4	0
5	0
6	0
7	5.2
8	0
9	0
10	5.2
11	0
12	0
13	5.2
14	0
15	0
16	5.2
IC3101	
1	4.1
2	4.1
3	4.1
4	0
5	4.8
6	4.9
7	0
8	4.1
9	4.1
10	4.1
11	4.0
12	5.3
13	4.1
14	1.3
15	0
16	0
17	0
18	4.0
19	8.9
20	0
21	4.1
22	4.1
23	0
24	0
25	4.1
26	3.9
27	4.1
28	1.7
29	0
30	0
31	1.7
32	4.0
33	4.1
34	0
35	4.1
36	4.1
37	0
38	0.1
39	4.1
40	4.1
41	0.7
42	0
43	0
44	0
45	4.1
46	4.1
47	4.1
48	4.1
Q3001	
E	2.5
C	0
B	1.9
Q3002	
E	2.0
C	0
B	2.5
TU3001	
1	-
2	0
3	5.1
4	0
5	-
6	-
7	0.9
8	2.2
9	0
10	5.0
11	4.9
12	2.0
13	2.6
14	0
15	31.3
16	2.2
17	2.1
18	-
19	-
20	-
21	-

[P.2-15 - P.2-16]

MODE PIN NO.	DC (V)
IC601	
1	6.0
2	6.1
3	6.1
4	6.1
5	6.1
6	6.1
7	0.7
8	6.1
9	6.1
10	6.1
11	0.5
12	0.5
13	1.0
14	7.4
15	4.8
16	4.3
17	4.8
18	4.9
19	0
20	12.1
21	0
22	6.1
23	4.8
24	0
25	4.7
26	0
27	5.1
28	4.5
29	6.1
30	6.1
31	6.1
32	6.1
33	6.1
34	0
35	6.1
36	6.1
37	6.1
38	6.1
39	6.1
40	6.1
41	0
42	6.1
43	6.1
44	6.1
45	6.1
46	6.1
47	6.1
48	6.2
IC606	
1	0
2	5.0
3	0
4	0
5	5.2
6	0
7	0
8	0
9	5.2
10	0
11	0
12	0
13	5.2
14	0
15	0
16	5.2
IC751	
1	2.0
2	0
3	2.1
4	0
5	0
6	0
7	2.1
8	0.2
Q614	
E	8.1
C	-0.1
B	8.7
Q621	
E	5.0
C	0
B	5.2
Q622	
E	0
C	5.2
B	0
Q751	
E	0
C	0
B	0
Q752	
E	0
C	0
B	2.6

[P.2-17 - P.2-18]

MODE PIN NO.	DC (V)
IC902	
1	4.9
2	0
3	3.3

<DIGITAL PWB>

[P.2-19 - P.2-20]

MODE PIN NO.	DC (V)
Q7501	
E	0
C	1.2
B	1.9

[P.2-27 - P.2-28]

MODE PIN NO.	DC (V)
IC6250	
1	0
2	5.2
3	1.6
4	0
5	0
6	0
7	0
8	0
9	5.2
10	0
11	0
12	0
13	0
14	0
15	0.8
16	5.2
17	0
18	0
19	0
20	1.7
21	0
22	0
23	5.2
24	0
IC6251	
1	1.5
2	0
3	0
4	5.3
5	3.3
Q6201	
E	2.5
C	0
B	0
Q6202	
E	3.2
C	0
B	2.6
Q6203	
E	2.6
C	0
B	1.8
Q6204	
E	2.9
C	0
B	2.2
Q6205	
E	3.0
C	0
B	2.2
Q6206	
E	0
C	0
B	0
Q6207	
E	1.3
C	5.3
B	2.1
Q6208	
E	1.4
C	5.3
B	2.1
Q6209	
E	1.5
C	0
B	2.1
Q6210	
E	1.4
C	5.3
B	0
Q6211	
E	2.2
C	5.3
B	2.9
Q6212	
E	2.3
C	5.3
B	3.0
Q6213	
E	0
C	5.3
B	0
Q6214	
E	1.3
C	5.3
B	2.0
Q6250	
E	1.6
C	5.2
B	2.1
Q6251	
E	2.1
C	5.2
B	2.1

[P.2-29 - P.2-30]

MODE PIN NO.	DC (V)
IC6001	-
IC6002	
1	1.0
2	1.2
3	0
4	1.2
5	3.3
IC6724	
1	0
2	3.3
3	0
4	3.3

[P.2-33 - P.2-34]

MODE PIN NO.	DC (V)
IC6101	
1	1.2
2	2.5
3	1.3
4	1.2
5	0
6	1.2
7	1.2
8	2.5
9	1.2
10	1.2
11	0
12	1.2
13	1.2
14	2.5
15	2.5
16	0
17	1.2
18	1.2
19	0
20	1.3
21	1.2
22	2.5
23	0.6
24	0.6
25	1.8
26	1.8
27	1.8
28	0
29	0.6
30	0.6
31	0.6
32	0.6
33	0.6
34	0.6
35	2.5
36	0.6
37	0.6
38	0
39	0
40	0
41	0
42	0
43	0
44	0.1
45	0.6
46	0
47	0.6
48	0.6
49	0.6
50	0.6
51	0.6
52	0
53	0.6
54	1.2
55	1.2
56	0.6
57	0.6
58	1.2
59	2.5
60	1.2
61	1.2
62	0
63	1.1
64	1.2
65	2.5
66	0
67	2.5
68	1.2
69	1.2
70	0
71	1.2
72	1.2
73	2.5
74	1.2
75	1.2
76	0
77	1.3
78	1.2
79	2.5

MODE PIN NO.	DC (V)
80	1.0
81	1.2
82	0
83	1.2
84	1.2
85	0
86	2.5
87	0
88	0
89	0
90	0
91	0
92	0
93	0
94	1.3
95	2.5
96	2.5
97	1.2
98	1.2
99	0
100	1.2
IC6102	
1	0
2	2.5
3	1.2
4	1.2
5	2.4
6	2.4
7	2.4
8	1.3

[P.2-35 - P.2-36]

MODE PIN NO.	DC (V)
IC7201	
1	0.3
2	0.3
3	0.3
4	0.2
5	0.2
6	0.1
7	0.2
8	0.3
9	0.1
10	0
11	3.1
12	3.3
13	0
14	0
15	0
16	0
17	0
18	0.1
19	0.3
20	0.3
21	0.3
22	0.3
23	0.3
24	0.3
25	0
26	3.2
27	0
28	0.1
29	0.5
30	0.3
31	0.4
32	0.1
33	0.4
34	0.2
35	0.2
36	0.1
37	0
38	0.1
39	0.2
40	0.4
41	0.2
42	0.3
43	0.2
44	0.2
45	0.1
46	0
47	3.3
48	0.4
IC7203	
1	0
2	0.4
3	0.4
4	0
5	0.4
6	0.3
7	0.2
8	0.4
9	0.2
10	0
11	0.4
12	0.3

MODE PIN NO.	DC (V)
13	3.3
14	2.7
15	3.2
16	0
17	3.2
18	2.5
19	0
20	0.1
21	0.2
22	0.3
23	0.4
24	0.4
25	3.3
26	0
27	0.2
28	0.3
29	0.3
30	0.3
31	0.3
32	0.3
33	0
34	3.3
35	0
36	2.7
37	0
38	3.3
39	0.5
40	0.5
41	0
42	0.3
43	0.2
44	3.2
45	0.2
46	0.3
47	0
48	0.4
49	0.1
50	0
IC7204	
1	0
2	3.2
3	0
4	3.2

[P.2-37 - P.2-38]

MODE PIN NO.	DC (V)
IC7033	
1	0
2	3.3
3	3.3
4	3.3
5	3.3
6	3.3
7	0
8	0
9	0
10	3.2
11	0
12	3.3
13	0
14	3.3
15	3.3
16	3.3
IC7036	
1	0
2	0
3	0
4	3.3
5	3.2
6	0
IC7039	
1	0
2	2.8
3	0
4	0
5	0
Q7032	
E	3.3
C	3.2
B	0
Q7033	
E	3.3
C	0
B	0
Q7034	
E	3.3
C	3.3
B	0

[P.2-39 - P.2-40]

MODE PIN NO.	DC (V)
IC6502	
1	3.3
2	1.1
3	1.4
4	1.3
5	0
6	1.1
7	0.2
8	0.7
9	3.3
10	0
11	0.6
12	0.8
13	0
14	0
15	0
16	0
17	0
18	0
19	0.8
20	0
21	0
22	0.8
23	0.9
24	1.3
25	1.6
26	3.3
27	0
28	0
29	0
30	2.8
31	1.3
32	2.9
33	0
34	3.1
35	0
36	0
37	1.2
38	1.2
39	0
40	0.1
41	0
42	1.3
43	0
44	3.3
45	1.1
46	1.3
47	1.2
48	1.3
49	0
50	1.5
51	1.1
52	0.6
53	0.1
54	0.6
55	0
56	1.3
Q6501	
E	0
C	3.2
B	0
Q6502	
E	0
C	2.8
B	0
CN000W	
1	0
2	0
3	0
4	0
5	0
6	0
7	0
8	3.0
9	2.9
10	0
11	1.6
12	0
CN0LV2	
1	12.1
2	11.9
3	12.0
4	12.0
5	0
6	0
7	0
8	0.1
9	0.2
10	3.1
11	0
12	0
13	0
14	0
15	0
16	0
17	0
18	0

-40]

(V)
3.3
1.1
1.4
1.3
0
1.1
0.2
0.7
3.3
0
0.6
0.8
0
0
0
0
0
0
0.8
0
0
0.8
0.9
1.3
1.6
3.3
0
0
0
2.8
1.3
2.9
0
3.1
0
0
1.2
1.2
0
0.1
0
1.3
0
3.3
1.1
1.3
1.2
1.3
0
1.5
1.1
0.6
0.1
0.6
0
1.3
0
3.2
0
0
2.8
0
0
0
0
0
0
0
0
3.0
2.9
0
1.6
0
2.1
1.9
2.0
2.0
0
0
0
0.1
0.2
3.1
0
0
0
0
0
0
0
0

[P.2-45 - P.2-46]

MODE PIN NO.	DC (V)
IC6901	
1	0
2	0
3	3.3
4	5.3
IC9001	
1	8.2
2	16.4
3	3.3
4	0
5	0.9
6	1.3
7	0.8
8	0.9
IC9101	
1	3.2
2	0
3	2.4
IC9201	
1	6.1
2	16.5
3	1.1
4	0
5	0
6	1.2
7	3.2
8	0.9
IC9301	
1	1.2
2	0
3	0
4	0.3
5	3.3
6	0
7	0
8	3.3
Q9501	
E	3.2
C	0
B	0
Q9502	
E	0
C	0
B	0.6
Q9503	
E	0
C	0
B	0.6

[P.2-47 - P.2-48]

MODE PIN NO.	DC (V)
IC7601	
1	0
2	0
3	0
4	0
5	0
6	1.1
7	2.8
8	0
9	0
10	0
11	0
12	3.3
13	1.8
14	0
15	1.5
16	3.3
17	1.2
18	1.3
19	0
20	3.3
21	0
22	0
23	0
24	0
25	0
26	0
27	0.6
28	0.7
29	5.1
30	3.3
31	0
32	0
33	0
34	0
35	3.3
36	3.3
37	0.4
38	0.3
39	0
40	0
41	3.3
42	0
43	0
44	0
45	0
46	0
47	3.3
48	0
49	3.3
50	0
51	3.3
52	0
53	0
54	0
55	0
56	0
57	0
58	0
59	0
60	0
61	0
62	3.1
63	0
64	3.3
65	0
66	0
67	0
68	0
69	0
70	0
71	0
72	0
73	0
74	0
75	0
76	0
77	0
78	0
79	0
80	0
81	0
82	3.3
83	0
84	3.3
85	0.5
86	3.3
87	3.3
88	3.3
89	0
90	0
91	0
92	0
93	3.2
94	3.3
95	0.1
96	0.1

MODE PIN NO.	DC (V)
97	0
98	0
99	5.1
100	0
IC7602	
1	0
2	0
3	0
4	0
5	3.2
6	3.2
7	0
8	3.2
IC7603	
1	3.3
2	3.3
3	0
4	5.0
5	5.1
IC7604	
1	0
2	0
3	0
4	3.2
5	3.3
IC7605	
1	5.3
2	0.6
3	0.7
4	0
5	0
6	5.3
IC7606	
1	5.3
2	1.6
3	1.6
4	2.5
5	0
6	5.3

[P.2-49 - P.2-50]

MODE PIN NO.	DC (V)
CN0ID	
1	3.2
2	3.3
3	0
4	0
5	0

<POWER PWB>
[P.2-51 - P.2-52]

MODE PIN NO.	DC (V)
IC9202	
1	6.0
2	0
3	5.0
IC9301	
1	0
2	4.4
3	3.5
4	0
5	0
6	0
7	0
8	8.8
IC9501	
1	128.8
2	0
3	0
4	19.7
5	0
6	1.0
7	0.7
Q9001	
E	0
C	0
B	0.7
Q9503	
E	0
C	0
B	0.7
Q9505	
E	0
C	0
B	0.6
CN00P	
1	23.9
2	23.8
3	23.9
4	23.9
5	23.9
6	0
7	0
8	0
9	0
10	0
CN00Q	
1	23.9
2	23.9
3	23.9
4	23.9
5	23.9
6	0
7	0
8	0
9	0
10	0

<LED PWB>
[P.2-53 - P.2-54]

MODE PIN NO.	DC (V)
IC8951	
1	5.3
2	1.2
IC8952	
1	3.0
2	4.9
3	0
Q8905	
E	3.7
C	0
B	0
Q8906	
E	3.9
C	3.7
B	0
Q8907	
E	3.7
C	3.6
B	0
Q8908	
E	0
C	0
B	3.2
Q8909	
E	0
C	0
B	3.0

<D-AMP PWB>
[P.2-57 - P.2-58]

MODE PIN NO.	DC (V)
IC6201	
1	13.8
2	3.2
3	12.3
4	2.6
5	0
IC6501	
1	6.2
2	6.2
3	6.1
4	0
5	6.1
6	6.2
7	6.2
8	12.3
IC6621	
1	-7.5
2	0
3	0
4	-13.9
5	0
6	0
7	-7.5
8	13.3
IC6661	
1	-7.6
2	-7.9
3	0.6
4	0.5
5	13.8
6	11.9
7	0
8	-14.0
9	-1.2
10	-13.9
11	0
12	11.9
13	13.9
14	0.6
15	-3.3
16	-7.9
17	-7.5
Q6661	
E	13.8
C	-13.9
B	13.8
Q6662	
E	-13.9
C	0.6
B	-13.9
Q6663	
E	0
C	13.8
B	0

<DC-DC PWB>
[P.2-59 - P.2-60]

MODE PIN NO.	DC (V)
IC9601	
1	10.0
2	23.8
3	0
4	0
5	0.9
6	1.0
7	6.2
8	0.9
IC9602	
1	16.3
2	23.9
3	12.1
4	0
5	0.9
6	0
7	3.1
8	0.9
IC9701	
1	8.0
2	0
3	3.3
4	0
5	0.9
6	0
7	6.6
8	0.9
IC9751	
1	7.3
2	16.5
3	2.5
4	0
5	0.9
6	0
7	3.4
8	0.9
IC9801	
1	9.7
2	23.9
3	5.0
4	0
5	0.9
6	1.0
7	3.4
8	0.9
IC9851	
1	16.5
2	16.5
3	8.9
4	0
5	0
IC9852	
1	165
2	165
3	8.9
4	0
5	0
IC9901	
1	16.5
2	16.5
3	9.0
4	2.6
5	0
Q9601	
E	0
C	0
B	0.6
Q9651	
E	0
C	0
B	0.7
Q9801	
E	0
C	0
B	0
Q9904	
E	8.3
C	8.9
B	9.0
Q9905	
E	0
C	0
B	3.2
CN0AT	
1	31.4
2	5.1
3	0
4	3.3
5	0
6	2.5
7	0
8	8.9
9	0

<SD CARD PWB>
[P.2-61 - P.2-62]

MODE PIN NO.	DC (V)
IC2001	
1	0
2	1.4
3	1.7
4	0
5	3.4
6	5.0
7	3.4
8	0
9	3.1
10	3.4
11	3.4
12	0
13	0
14	0
15	0
16	3.4
17	3.0
18	3.4
19	1.3
20	1.7
21	1.3
22	0
23	0
24	0
25	0
26	0
27	0
28	0
Q2001	
E	3.4
C	1.3
B	3.2
CN200L	
1	0
2	0
3	3.4
4	5.1
5	0
6	3.1
7	0
8	0
9	0

<OPTICAL PWB>
[P.2-63 - P.2-64]

MODE PIN NO.	DC (V)
IC2501	
1	0
2	5.1
3	0
CN00DA	
1	5.1
2	0
3	0

WAVEFORMS

ANALOG PWB (1/6)
(SHEET1)

IC101-45

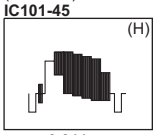

0.8 Vp-p

IC101-49

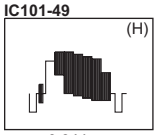

0.8 Vp-p

IC101-57

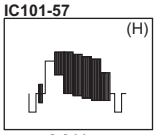

0.9 Vp-p

IC101-79

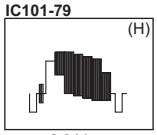

0.9 Vp-p

IC102-2

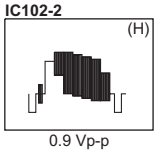

0.9 Vp-p

IC102-28

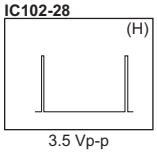

3.5 Vp-p

IC102-37

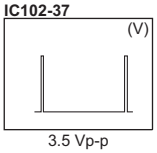

3.5 Vp-p

IC102-38

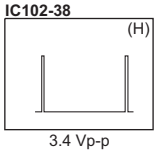

3.4 Vp-p

IC102-41

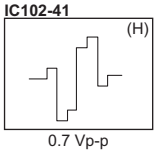

0.7 Vp-p

IC102-43

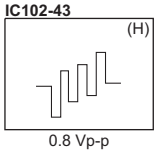

0.8 Vp-p

IC102-45

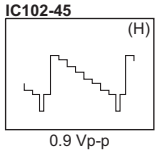

0.9 Vp-p

ANALOG PWB (3/6)
(SHEET3)

TU3001-17

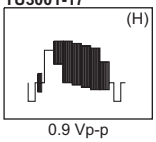

0.9 Vp-p

DIGITAL PWB (15/16)
(SHEET21)

IC7601-13

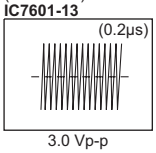

3.0 Vp-p

IC7601-15

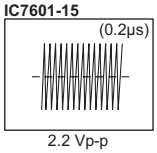

2.2 Vp-p

IC7601-17

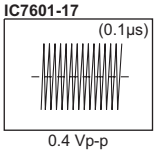

0.4 Vp-p

IC7601-62

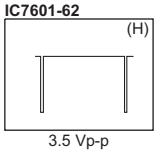

3.5 Vp-p

IC7601-64

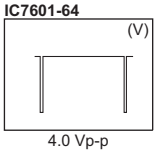

4.0 Vp-p

IC7601-97

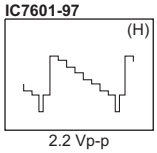

2.2 Vp-p

IC7601-100

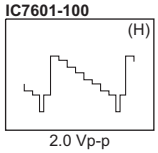

2.0 Vp-p

IC7605-2

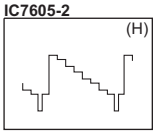

2.1 Vp-p

IC7605-4

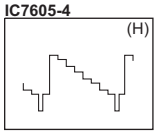

0.5 Vp-p

IC7606-2

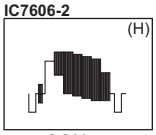

2.3 Vp-p

IC7606-4

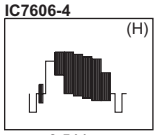

0.5 Vp-p

JVC
Victor Company of Japan, Limited
Flat Panel Display Category 12, 3-chome, Moriya-cho, kanagawa-ku, Yokohama-city, kanagawa-prefecture, 221-8528, Japan

(No.YA428)

Printed in Japan
VPT

PARTS LIST

CAUTION

- The parts identified by the ⚠ symbol are important for the safety . Whenever replacing these parts, be sure to use specified ones to secure the safety.
- The parts not indicated in this Parts List and those which are filled with lines --- in the Parts No. columns will not be supplied.
- P.W. BOARD Ass'y will not be supplied, but those which are filled with the Parts No. in the Parts No. columns will be supplied.

ABBREVIATIONS OF RESISTORS, CAPACITORS AND TOLERANCES

RESISTORS	
CR	Carbon Resistor
FR	Fusible Resistor
PR	Plate Resistor
VR	Variable Resistor
HV R	High Voltage Resistor
MF R	Metal Film Resistor
MG R	Metal Glazed Resistor
MP R	Metal Plate Resistor
OM R	Metal Oxide Film Resistor
CMF R	Coating Metal Film Resistor
UNF R	Non-Flammable Resistor
CH V R	Chip Variable Resistor
CH MG R	Chip Metal Glazed Resistor
COMP. R	Composition Resistor
LPTC R	Linear Positive Temperature Coefficient Resistor

CAPACITORS	
C CAP.	Ceramic Capacitor
E CAP.	Electrolytic Capacitor
M CAP.	Mylar Capacitor
CH CAP.	Chip Capacitor
HV CAP.	High Voltage Capacitor
MF CAP.	Metalized Film Capacitor
MM CAP.	Metalized Mylar Capacitor
MP CAP.	Metalized Polystyrol Capacitor
PP CAP.	Polypropylene Capacitor
PS CAP.	Polystyrol Capacitor
TF CAP.	Thin Film Capacitor
MPP CAP.	Metalized Polypropylene Capacitor
TAN. CAP.	Tantalum Capacitor
CH C CAP.	Chip Ceramic Capacitor
BP E CAP.	Bi-Polar Electrolytic Capacitor
CH AL E CAP.	Chip Aluminum Electrolytic Capacitor
CH AL BP CAP.	Chip Aluminum Bi-Polar Capacitor
CH TAN. E CAP.	Chip Tantalum Electrolytic Capacitor
CH AL BP E CAP.	Chip Tantalum Bi-Polar Electrolytic Capacitor

RESISTORS									
F	G	J	K	M	N	R	H	Z	P
±1%	±2%	±5%	±10%	±20%	±30%	+30% -10%	+50% -10%	+80% -20%	+100% -0%

CONTENTS

USING P.W. BOARD & REMOTE CONTROL UNIT 3-3
EXPLODED VIEW PARTS LIST -1 3-4
EXPLODED VIEW -1 3-5
EXPLODED VIEW PARTS LIST -2 3-6
EXPLODED VIEW -2 3-6
EXPLODED VIEW PARTS LIST -3 3-7
EXPLODED VIEW -3 3-7

PRINTED WIRING BOARD PARTS LIST [LT-32X667/Z] 3-8
SD CARD P.W. BOARD ASS'Y (SFL-1305A-M2) 3-8
ANALOG P.W. BOARD ASS'Y (SFL-1311A-M2) 3-8
OPTICAL P.W. BOARD ASS'Y (SFL-2501A-M2) 3-11
D-AMP P.W. BOARD ASS'Y (SFL-6301A-M2) 3-11
SW P.W. BOARD ASS'Y (SFL-7207A-M2) 3-12
LED P.W. BOARD ASS'Y (SFL-8901A-M2) 3-12
POWER P.W. BOARD ASS'Y (SFL-9048A-M2) 3-12
DC-DC P.W. BOARD ASS'Y (SFL-9154A-M2) 3-13
DIGITAL P.W. BOARD ASS'Y (SFL0D178A-M2) 3-14
ATSC TUNER MODULE P.W. BOARD ASS'Y (SSD-2204A-M2) 3-18

PRINTED WIRING BOARD PARTS LIST [LT-32X787/Z] 3-19
SD CARD P.W. BOARD ASS'Y (SFL-1305A-M2) 3-19
ANALOG P.W. BOARD ASS'Y (SFL-1311A-M2) 3-19
OPTICAL P.W. BOARD ASS'Y (SFL-2501A-M2) 3-19
D-AMP P.W. BOARD ASS'Y (SFL-6301A-M2) 3-19
SW P.W. BOARD ASS'Y (SFL-7207A-M2) 3-19
LED P.W. BOARD ASS'Y (SFL-8901A-M2) 3-19
POWER P.W. BOARD ASS'Y (SFL-9048A-M2) 3-19
DC-DC P.W. BOARD ASS'Y (SFL-9154A-M2) 3-19
DIGITAL P.W. BOARD ASS'Y (SFL0D175A-M2) 3-19
ATSC TUNER MODULE P.W. BOARD ASS'Y (SSD-2204A-M2) 3-23

PRINTED WIRING BOARD PARTS LIST [LT-32X887/Z] 3-24
SD CARD P.W. BOARD ASS'Y (SFL-1305A-M2) 3-24
ANALOG P.W. BOARD ASS'Y (SFL-1311A-M2) 3-24
OPTICAL P.W. BOARD ASS'Y (SFL-2501A-M2) 3-24
D-AMP P.W. BOARD ASS'Y (SFL-6301A-M2) 3-24
SW P.W. BOARD ASS'Y (SFL-7207A-M2) 3-24
LED P.W. BOARD ASS'Y (SFL-8901A-M2) 3-24
POWER P.W. BOARD ASS'Y (SFL-9048A-M2) 3-24
DC-DC P.W. BOARD ASS'Y (SFL-9154A-M2) 3-24
DIGITAL P.W. BOARD ASS'Y (SFL0D173A-M2) 3-24
ATSC TUNER MODULE P.W. BOARD ASS'Y (SSD-2204A-M2) 3-28

REMOTE CONTROL UNIT PARTS LIST (RM-C18G-1H) 3-29
PACKING 3-29
PACKING PARTS LIST 3-29

USING P.W. BOARD & REMOTE CONTROL UNIT

P.W.B ASS'Y name	P.W.B ASS'Y No.		
	LT-32X667/Z	LT-32X787/Z	LT-32X887/Z
SD CARD P.W.B	SFL-1305A-M2	←	←
ANALOG P.W.B	SFL-1311A-M2	←	←
OPTICAL P.W.B	SFL-2501A-M2	←	←
D-AMP P.W.B	SFL-6301A-M2	←	←
SW P.W.B	SFL-7207A-M2	←	←
LED P.W.B	SFL-8901A-M2	←	←
POWER P.W.B	SFL-9048A-M2	←	←
DC-DC P.W.B	SFL-9154A-M2	←	←
DIGITAL P.W.B	SFL0D178A-M2	SFL0D175A-M2	SFL0D173A-M2
ATSC TUNER MODULE P.W.B	SSD-2204A-M2	←	←
REMOTE CONTROL UNIT	RM-C18G-1H	←	←

EXPLODED VIEW PARTS LIST -1

⚠	Ref.No.	Part No.	Part Name	Description	Local
	101	LC12704-002A-HK	JACK COVER		
	103	LC42545-001A-C	STAND BASE UNIT	Inc.103A	LT-32X667Z,LT-32X887Z
	103	LC42545-002A-C	STAND BASE UNIT	Inc.103A	LT-32X787Z
	103A	T0164-01	STAND COVER		
	105	LC42544-001A-C	SUPPORT UNIT	Inc.105A.105B	
	105A	M04R-PPBF-C3-14	SCREW	(x4)	
	105B	P0244-M9-03-01	SCREW	(x2)	
	106	QYSPSPD5014MA	SCREW	M5 x 14mm(x4)	
⚠	107	LC12799-001A-HK	REAR COVER ASSY		
	108	QYSBSFG4016MA	TAP SCREW	M4 x 16mm(x7)	
	109	LC42446-002A	SCREW		
	110	QYSBSF3010MA	TAP SCREW	M3 x 10mm(x5)	
	111	WJJ0721-001A-E	E-SI C WIRE C-C	ATSC CN600-DC-DC AT	
	112	WJX0037-001A-E	E-COAXIAL ASSY	ATSC-ANALOG	
	113	QQR0490-001	NOISE FILTER	(x2)	
	114	WJJ0720-001A-E	E-SI C WIRE C-C	ATSC CN1005-OPTICAL	
	115	WJJ0719-001A-E	E-SI C WIRE C-C	ATSC CN1004-SD CARD L	
	116	QAR0370-002	COOLING FAN		
	118	QJJ064-100600-E	SIN CR C-C WIRE	D-AMP CN00S-ANALOG S	
	119	WJZ0207-002A-E	E-HARNESS ASSY	D-AMP-SPEAKER	
	120	QUQL05-4009AA-E	FFC WIRE	ANALOG CN002-DIGITAL CN002	
	121	QUQL05-5009AA-E	FFC WIRE	ANALOG CN001-DIGITAL CN001	
	122	QJJ009-151010-E	SIN CR C-C WIRE	DIGITAL CN0DC-DC-DC DC	
	123	WJZ0216-001A-E	E-HARNESS ASSY	ANLOG UA-ATSC CN5004	
	124	LC42446-001A	SCREW		
	125	LC42340-001B-HK	SERVICE COVER		
	126	LC42446-001A	SCREW		
	127	QYSPSP3008ZA	SCREW	M3 x 8mm(x2)	
	128	LC12497-008A-HK	SHIELD TERMINAL		
	129	QJJ009-150710-E	SIN CR C-C WIRE	ANALOG H-DC-DC H	
	130	QQR0490-001	NOISE FILTER		
	131	QQR0917-001	CORE FILTER		
⚠	132	LC12507-002B-0K	TUNER BASE		
	133	LC42446-002A	SCREW	(x2)	
⚠	135	LC12506-009A-0K	TERMINAL BASE		
	136	QYSBSF3010MA	TAP SCREW	M3 x 10mm(x2)	
	137	QNB0036-001	CONN ACCESSORY	(x2)	
	138	QJJ009-151010-E	SIN CR C-C WIRE	POWER A-DC-DC A	
	139	QJJ015-043024-E	SIN CR C-C WIRE	POWER F-D-AMP CN10F	
⚠	140	QMPD460-170-JC	POWER CORD(US/CA)	1.7m BLACK	
⚠	141	LC22007-002A	POWER CORD HOLDER		
⚠	201	SFL-1305A-M2	SD CARD PWB		
⚠	202	SFL-2501A-M2	OPTICAL PWB		
⚠	203	SFL-6301A-M2	D-AMP PWB		
⚠	204	SFL0D178A-M2	DIGITAL PWB		LT-32X667Z
⚠	204	SFL0D175A-M2	DIGITAL PWB		LT-32X787Z
⚠	204	SFL0D173A-M2	DIGITAL PWB		LT-32X887Z
⚠	205	SFL-1311A-M2	ANALOG PWB		
⚠	206	SFL-9154A-M2	DC-DC PWB		
⚠	207	SFL-9048A-M2	POWER PWB		

EXPLODED VIEW -1

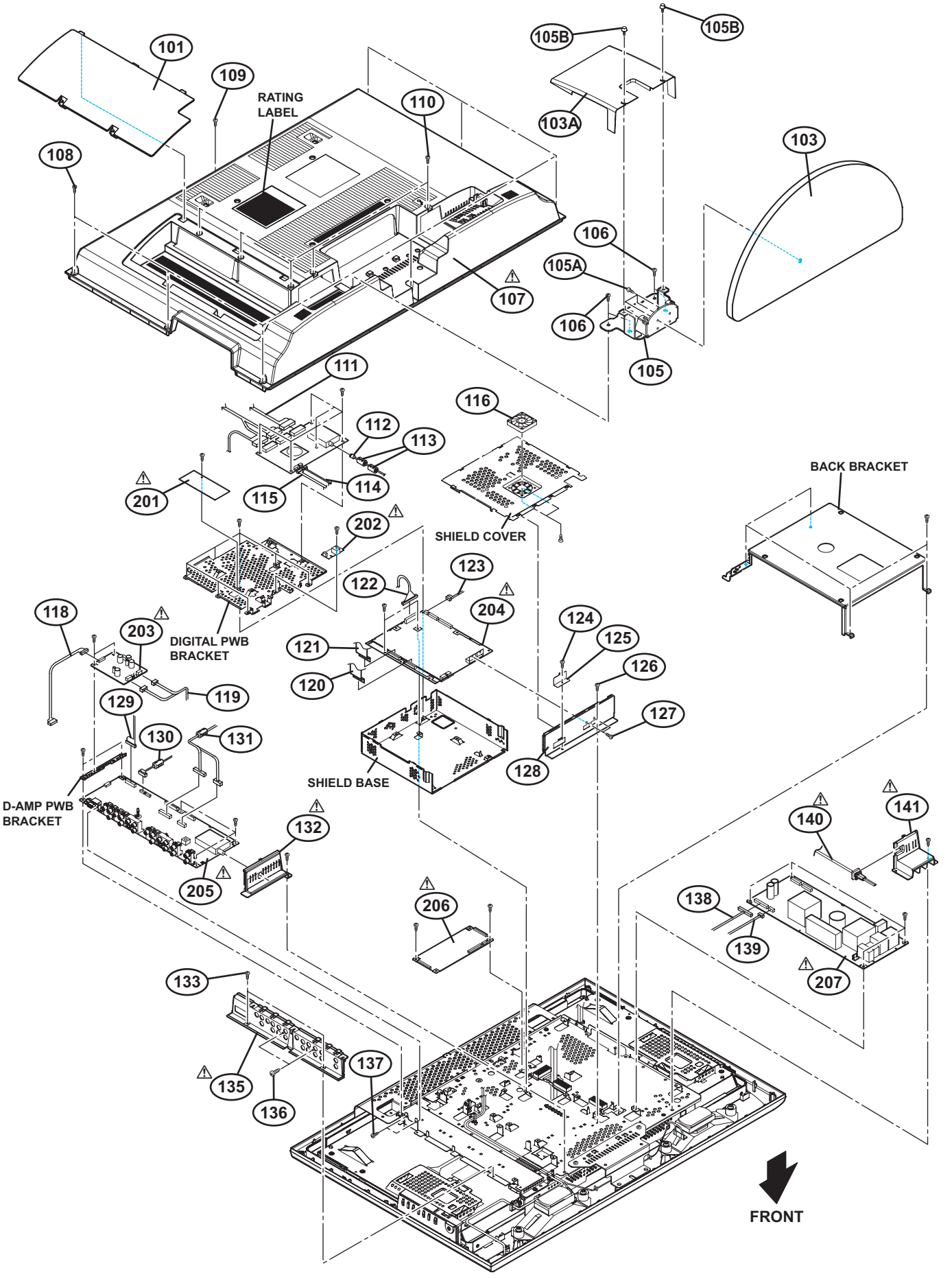

EXPLODED VIEW PARTS LIST -2

⚠	Ref.No.	Part No.	Part Name	Description	Local
	151	QLD0431-001-JIM	LCD PANEL UNIT		
	152	WJW0045-002A-E	DIGITAL (LVDS) CABLE	DIGITAL CN0LV1-LCD PANEL	
	153	WJZ0210-002A-E	E-HARNESS ASSY	POWER-LCD PANEL UNIT	
⚠	154	LC12780-002A-HK	FRONT PANEL ASSY		LT-32X667Z
⚠	154	LC12780-004B-HK	FRONT PANEL ASSY		LT-32X787Z
⚠	154	LC12780-001A-HK	FRONT PANEL ASSY		LT-32X887Z
	155	LC33506-001A	LED PLATE		LT-32X667Z,LT-32X887Z
	155	LC33506-002A	LED PLATE		LT-32X787Z
	156	QAS0446-001	SPEAKER	(x2)	
	157	LC41458-002A	TAPPING SCREW	(x4)	
	158	QQR0490-001	NOISE FILTER		
⚠	159	LC33404-005A-HK	CONTROL ASSY		
⚠	208	SFL-7207A-M2	SW PWB		
⚠	209	SFL-8901A-M2	LED PWB		

EXPLODED VIEW -2

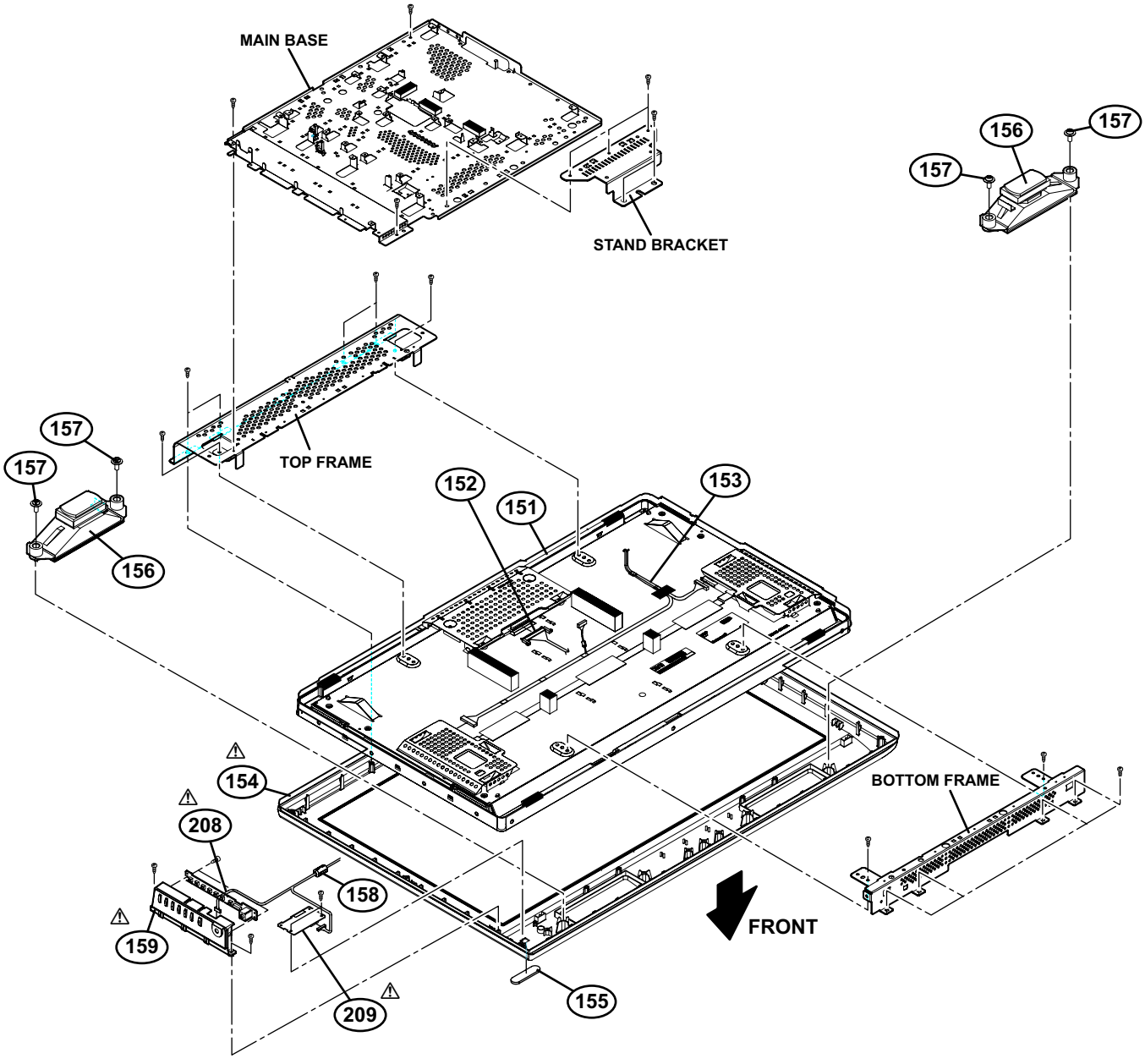

EXPLODED VIEW PARTS LIST -3

⚠	Ref.No.	Part No.	Part Name	Description	Local
⚠	501	6900L-0074A	BACKLIGHT UNIT		
⚠	502	6632L-0272A	INVERTER PWB	MASTER SIDE	
⚠	503	6632L-0273A	INVERTER PWB	SLAVE SIDE	
⚠	504	6871L-0796A	CONTROL PWB		

EXPLODED VIEW -3

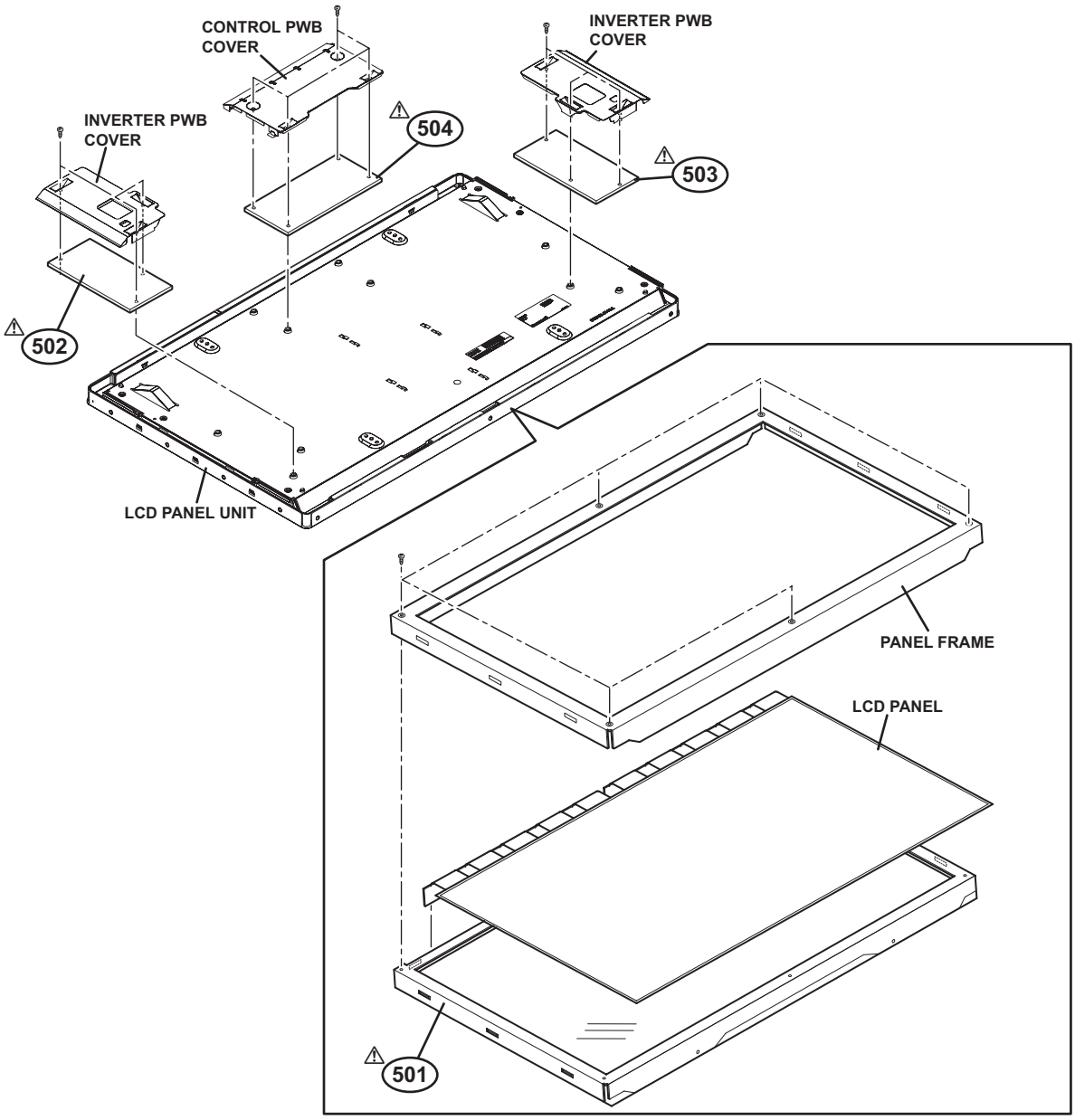

PRINTED WIRING BOARD PARTS LIST [LT-32X667/Z]

SD CARD P.W. BOARD ASS'Y (SFL-1305A-M2)

⚠Ref No.	Part No.	Part Name	Description	Local
IC2001	AU9331C23-MAS-X	IC		
Q2001	2SA1576A/QRS/-X	TRANSISTOR		
C2001	NCB11AK-106X	C CAPACITOR	10uF 10V K	
C2002	NDC31HJ-270X	C CAPACITOR	27pF 50V J	
C2003	NDC31HJ-270X	C CAPACITOR	27pF 50V J	
C2004	NDC31HJ-150X	C CAPACITOR	15pF 50V J	
C2005	NDC31HJ-150X	C CAPACITOR	15pF 50V J	
C2006	NDC31HJ-120X	C CAPACITOR	12pF 50V J	
C2007	NDC31HJ-120X	C CAPACITOR	12pF 50V J	
C2008	NCF31CZ-104X	C CAPACITOR	0.1uF 16V Z	
C2009	NCF31CZ-104X	C CAPACITOR	0.1uF 16V Z	
C2010	NCF31CZ-104X	C CAPACITOR	0.1uF 16V Z	
C2011	NCB11AK-106X	C CAPACITOR	10uF 10V K	
C2012	NCB31HK-103X	C CAPACITOR	0.01uF 50V K	
C2013	NCF31CZ-104X	C CAPACITOR	0.1uF 16V Z	
C2014	NCF31CZ-104X	C CAPACITOR	0.1uF 16V Z	
C2015	NEHL0GM-227X	E CAPACITOR	220uF 4V M	
C2016	NCF31CZ-104X	C CAPACITOR	0.1uF 16V Z	
R2001	NRSA63J-152X	MG RESISTOR	1.5kΩ 1/16W J	
R2003	NRSA63J-330X	MG RESISTOR	33Ω 1/16W J	
R2004	NRSA63J-330X	MG RESISTOR	33Ω 1/16W J	
R2005	NRSA63J-0R0X	MG RESISTOR	0Ω 1/16W J	
R2006	NRSA63J-105X	MG RESISTOR	1MΩ 1/16W J	
R2007	NRSA63J-471X	MG RESISTOR	470Ω 1/16W J	
R2008	NRSA63J-473X	MG RESISTOR	47kΩ 1/16W J	
R2009	NRSA63J-222X	MG RESISTOR	2.2kΩ 1/16W J	
R2010	NRSA63J-102X	MG RESISTOR	1kΩ 1/16W J	
R2012	NRSA63J-102X	MG RESISTOR	1kΩ 1/16W J	
R2014	NRSA63J-473X	MG RESISTOR	47kΩ 1/16W J	
R2015	NRSA63J-103X	MG RESISTOR	10kΩ 1/16W J	
RA2001	NRZ0040-103X	NET RESISTOR	10kΩ 1/16W J x4	
RA2002	NRZ0040-473X	NET RESISTOR	47kΩ 1/16W J x4	
L2001	NQR0603-002X	EMI FILTER		
JK2001	NNZ0058-001X	SD CARD CONNECTOR		
K2001	NQR0499-002X	FERRITE BEADS		
K2002	NQR0499-002X	FERRITE BEADS		
LC2001	NQR0483-007X	EMI FILTER		
X2001	NAX0877-001X	CRYSTAL	12MHz	

ANALOG P.W. BOARD ASS'Y (SFL-1311A-M2)

⚠Ref No.	Part No.	Part Name	Description	Local
IC101	R2S11004FT	IC		
IC102	R2S11003FT	IC		
IC106	CD4066BNS-X	IC		
IC381	M62320FP-X	IC		
IC601	NJW1182FP1	IC		
IC606	M62320FP-X	IC		
IC751	BH3547F-X	IC		
IC902	BA33BC0FP-X	IC		
IC3101	CXA2205Q-X	IC		
Q101	RT1N441C-X	TRANSISTOR		
Q102	RT1N441C-X	TRANSISTOR		
Q106	SSM3K17FU-X	MOS FET		
Q107	SSM3K17FU-X	MOS FET		
Q108	2SC1623A/5-6/-X	TRANSISTOR		
Q109	2SA1022/BC/-X	TRANSISTOR		
Q110	2SA1022/BC/-X	TRANSISTOR		
Q111	2SA1022/BC/-X	TRANSISTOR		
Q112	2SA1022/BC/-X	TRANSISTOR		
Q113	2SC1623A/5-6/-X	TRANSISTOR		
Q281	2SA812A/5-6/-X	TRANSISTOR		
Q431	RT4N430C-X	DIGI TRANSISTOR		
Q432	RT4N430C-X	DIGI TRANSISTOR		
Q433	RT1P440C-X	DIGI TRANSISTOR		
Q614	2SA812A/5-6/-X	TRANSISTOR		
Q621	2SA812A/5-6/-X	TRANSISTOR		
Q622	2SC1623A/5-6/-X	TRANSISTOR		
Q751	2SA812A/5-6/-X	TRANSISTOR		
Q752	UN2226-X	DIGI TRANSISTOR		
Q3001	2SA1530A/QR/-X	TRANSISTOR		
Q3002	2SC3928A/QR/-X	TRANSISTOR		
D105	1SS355W-X	DIODE		
D281	1SS355W-X	DIODE		
D282	1SS355W-X	DIODE		
D283	1SS355W-X	DIODE		
D401	UDZS10B-X	Z DIODE		
D402	UDZS10B-X	Z DIODE		
D403	UDZS10B-X	Z DIODE		
D404	UDZS10B-X	Z DIODE		
D405	UDZS10B-X	Z DIODE		
D406	UDZS10B-X	Z DIODE		
D407	UDZS10B-X	Z DIODE		
D408	UDZS10B-X	Z DIODE		
D409	UDZS10B-X	Z DIODE		
D411	UDZS10B-X	Z DIODE		
D412	UDZS10B-X	Z DIODE		
D413	UDZS10B-X	Z DIODE		
D414	UDZS10B-X	Z DIODE		
D415	UDZS10B-X	Z DIODE		
D416	UDZS10B-X	Z DIODE		
D420	UDZS10B-X	Z DIODE		
D421	UDZS10B-X	Z DIODE		
D422	UDZS10B-X	Z DIODE		
D423	UDZS10B-X	Z DIODE		
D424	UDZS10B-X	Z DIODE		
D425	UDZS10B-X	Z DIODE		
D427	UDZS10B-X	Z DIODE		
D428	UDZS10B-X	Z DIODE		
D431	UDZS10B-X	Z DIODE		
D432	UDZS10B-X	Z DIODE		
D461	UDZS10B-X	Z DIODE		
D462	UDZS10B-X	Z DIODE		
D463	UDZS10B-X	Z DIODE		
D464	UDZS10B-X	Z DIODE		
D465	UDZS10B-X	Z DIODE		
D466	UDZS10B-X	Z DIODE		
D491	UDZW3.3B-X	Z DIODE		
D492	S9648	PHOTO CONDUCTOR		
D605	1SS355W-X	DIODE		
D606	1SS355W-X	DIODE		
D607	1SS355W-X	DIODE		
D608	1SS355W-X	DIODE		
D615	1SS355W-X	DIODE		
D621	1SS355W-X	DIODE		
D622	1SS355W-X	DIODE		
D751	1SS355W-X	DIODE		
D752	1SS355W-X	DIODE		
C101	NEHL1CM-107X	E CAPACITOR	100uF 16V M	
C102	NCB11CK-225X	C CAPACITOR	2.2uF 16V K	
C103	NCB11CK-225X	C CAPACITOR	2.2uF 16V K	
C106	NCB11CK-475X	C CAPACITOR	4.7uF 16V K	
C107	NCB31CK-104X	C CAPACITOR	0.1uF 16V K	
C108	NEHL1CM-476X	E CAPACITOR	47uF 16V M	
C116	NCB11AK-106X	C CAPACITOR	10uF 10V K	
C117	NCB31CK-104X	C CAPACITOR	0.1uF 16V K	
C118	NCB31AK-105X	C CAPACITOR	1uF 10V K	
C119	NCB31AK-105X	C CAPACITOR	1uF 10V K	
C120	NCB31AK-105X	C CAPACITOR	1uF 10V K	
C121	NCB31AK-105X	C CAPACITOR	1uF 10V K	
C122	NCB31CK-104X	C CAPACITOR	0.1uF 16V K	
C123	NCB31CK-104X	C CAPACITOR	0.1uF 16V K	
C124	NCB31AK-105X	C CAPACITOR	1uF 10V K	
C125	NCB31AK-105X	C CAPACITOR	1uF 10V K	
C126	NCB31AK-105X	C CAPACITOR	1uF 10V K	
C127	NCB31AK-105X	C CAPACITOR	1uF 10V K	
C128	NCB31CK-104X	C CAPACITOR	0.1uF 16V K	
C129	NCB31CK-104X	C CAPACITOR	0.1uF 16V K	
C130	NEHL1CM-476X	E CAPACITOR	47uF 16V M	
C131	NCB31CK-104X	C CAPACITOR	0.1uF 16V K	
C132	NCB31AK-105X	C CAPACITOR	1uF 10V K	
C133	NCB31AK-105X	C CAPACITOR	1uF 10V K	
C134	NCB31CK-105X	C CAPACITOR	1uF 16V K	
C136	NCB11AK-106X	C CAPACITOR	10uF 10V K	
C137	NCB11AK-106X	C CAPACITOR	10uF 10V K	
C138	NCB31HK-103X	C CAPACITOR	0.01uF 50V K	
C139	NCB31AK-105X	C CAPACITOR	1uF 10V K	
C141	NEHL1CM-106X	E CAPACITOR	10uF 16V M	
C142	NCB31CK-104X	C CAPACITOR	0.1uF 16V K	
C143	NCB31CK-104X	C CAPACITOR	0.1uF 16V K	
C156	NCB31HK-103X	C CAPACITOR	0.01uF 50V K	
C157	NCB31HK-103X	C CAPACITOR	0.01uF 50V K	
C158	NCB31HK-103X	C CAPACITOR	0.01uF 50V K	
C161	NCB31HK-103X	C CAPACITOR	0.01uF 50V K	
C166	NCB31HK-103X	C CAPACITOR	0.01uF 50V K	
C167	NCB31CK-104X	C CAPACITOR	0.1uF 16V K	
C168	NCB31CK-104X	C CAPACITOR	0.1uF 16V K	
C169	NCB31HK-103X	C CAPACITOR	0.01uF 50V K	
C170	NCB31HK-103X	C CAPACITOR	0.01uF 50V K	
C171	NCB31HK-103X	C CAPACITOR	0.01uF 50V K	

⚠Ref No.	Part No.	Part Name	Description	Local
C172	NCB31HK-223X	C CAPACITOR	0.022uF 50V K	
C173	NDC31HJ-680X	C CAPACITOR	68pF 50V J	
C174	NDC31HJ-331X	C CAPACITOR	330pF 50V J	
C175	NCB31HK-103X	C CAPACITOR	0.01uF 50V K	
C176	NCB31HK-103X	C CAPACITOR	0.01uF 50V K	
C177	NCB31CK-104X	C CAPACITOR	0.1uF 16V K	
C178	NCB31AK-105X	C CAPACITOR	1uF 10V K	
C179	NEHL1CM-476X	E CAPACITOR	47uF 16V M	
C180	NCB31CK-104X	C CAPACITOR	0.1uF 16V K	
C181	NCB31HK-103X	C CAPACITOR	0.01uF 50V K	
C182	NCB31HK-103X	C CAPACITOR	0.01uF 50V K	
C183	NCB31HK-103X	C CAPACITOR	0.01uF 50V K	
C184	NDC31HJ-221X	C CAPACITOR	220pF 50V J	
C185	NDC31HJ-820X	C CAPACITOR	82pF 50V J	
C187	NCB31CK-104X	C CAPACITOR	0.1uF 16V K	
C189	NEHL1CM-106X	E CAPACITOR	10uF 16V M	
C194	NCB21AK-225X	C CAPACITOR	2.2uF 10V K	
C195	NCB21AK-225X	C CAPACITOR	2.2uF 10V K	
C196	NCB21AK-225X	C CAPACITOR	2.2uF 10V K	
C199	NCB31CK-104X	C CAPACITOR	0.1uF 16V K	
C200	NCB31CK-104X	C CAPACITOR	0.1uF 16V K	
C201	NCB31CK-104X	C CAPACITOR	0.1uF 16V K	
C202	NCB31CK-104X	C CAPACITOR	0.1uF 16V K	
C204	NCB11CK-475X	C CAPACITOR	4.7uF 16V K	
C206	NCB11CK-475X	C CAPACITOR	4.7uF 16V K	
C207	NCB11CK-225X	C CAPACITOR	2.2uF 16V K	
C208	NCB11CK-225X	C CAPACITOR	2.2uF 16V K	
C211	NCB31CK-104X	C CAPACITOR	0.1uF 16V K	
C240	NDC31HJ-100X	C CAPACITOR	10pF 50V J	
C241	NDC31HJ-100X	C CAPACITOR	10pF 50V J	
C242	NDC31HJ-100X	C CAPACITOR	10pF 50V J	
C261	NCB31CK-104X	C CAPACITOR	0.1uF 16V K	
C262	NCB31CK-104X	C CAPACITOR	0.1uF 16V K	
C263	NCB31CK-104X	C CAPACITOR	0.1uF 16V K	
C264	NCB31CK-104X	C CAPACITOR	0.1uF 16V K	
C281	NEHL1CM-476X	E CAPACITOR	47uF 16V M	
C381	NDC31HJ-680X	C CAPACITOR	68pF 50V J	
C382	NDC31HJ-680X	C CAPACITOR	68pF 50V J	
C383	NCB31AK-105X	C CAPACITOR	1uF 10V K	
C401	NCB31HK-103X	C CAPACITOR	0.01uF 50V K	
C402	NCB21AK-225X	C CAPACITOR	2.2uF 10V K	
C403	NCB21AK-225X	C CAPACITOR	2.2uF 10V K	
C404	NCB21AK-225X	C CAPACITOR	2.2uF 10V K	
C405	NCB21AK-225X	C CAPACITOR	2.2uF 10V K	
C406	NCB21AK-225X	C CAPACITOR	2.2uF 10V K	
C407	NCB21AK-225X	C CAPACITOR	2.2uF 10V K	
C408	NCB21AK-225X	C CAPACITOR	2.2uF 10V K	
C409	NCB21AK-225X	C CAPACITOR	2.2uF 10V K	
C410	NCB31HK-103X	C CAPACITOR	0.01uF 50V K	
C411	NCB21AK-225X	C CAPACITOR	2.2uF 10V K	
C412	NCB21AK-225X	C CAPACITOR	2.2uF 10V K	
C413	NCB21AK-225X	C CAPACITOR	2.2uF 10V K	
C417	NCB21AK-225X	C CAPACITOR	2.2uF 10V K	
C418	NCB21AK-225X	C CAPACITOR	2.2uF 10V K	
C419	NCB21AK-225X	C CAPACITOR	2.2uF 10V K	
C420	NCB21AK-225X	C CAPACITOR	2.2uF 10V K	
C421	NCB21AK-225X	C CAPACITOR	2.2uF 10V K	
C422	NCB21AK-225X	C CAPACITOR	2.2uF 10V K	
C424	NCB21AK-225X	C CAPACITOR	2.2uF 10V K	
C425	NCB21AK-225X	C CAPACITOR	2.2uF 10V K	
C431	NCB11CK-225X	C CAPACITOR	2.2uF 16V K	
C432	NCB11CK-225X	C CAPACITOR	2.2uF 16V K	
C433	NCB11CK-105X	C CAPACITOR	1uF 16V K	
C461	NDC31HJ-101X	C CAPACITOR	100pF 50V J	
C462	NDC31HJ-101X	C CAPACITOR	100pF 50V J	
C463	NDC31HJ-101X	C CAPACITOR	100pF 50V J	
C464	NCB21AK-225X	C CAPACITOR	2.2uF 10V K	
C465	NCB21AK-225X	C CAPACITOR	2.2uF 10V K	
C466	NCB21AK-225X	C CAPACITOR	2.2uF 10V K	
C468	NDC31HJ-101X	C CAPACITOR	100pF 50V J	
C469	NDC31HJ-101X	C CAPACITOR	100pF 50V J	
C491	NEHL1CM-106X	E CAPACITOR	10uF 16V M	
C492	NCB31CK-104X	C CAPACITOR	0.1uF 16V K	
C493	NEHL1CM-107X	E CAPACITOR	100uF 16V M	
C494	NCB31HK-102X	C CAPACITOR	1000pF 50V K	
C612	NEHL1CM-107X	E CAPACITOR	100uF 16V M	
C614	NENA1CM-475X	BP E CAPACITOR	4.7uF 16V M	
C615	NENA1CM-475X	BP E CAPACITOR	4.7uF 16V M	
C616	NEHL1CM-476X	E CAPACITOR	47uF 16V M	
C617	NEHL1CM-106X	E CAPACITOR	10uF 16V M	
C623	NCB21CK-184X	C CAPACITOR	0.18uF 16V K	
C624	NCB31HK-222X	C CAPACITOR	2200pF 50V K	
C625	NCB31HK-183X	C CAPACITOR	0.018uF 50V K	
C628	NCB31HK-123X	C CAPACITOR	0.012uF 50V K	
C629	NCB31HK-222X	C CAPACITOR	2200pF 50V K	
C630	NCB21CK-184X	C CAPACITOR	0.18uF 16V K	
C632	NCB31HK-104X	C CAPACITOR	0.1uF 50V K	
C633	NCB31HK-822X	C CAPACITOR	8200pF 50V K	
C634	NCB31HK-822X	C CAPACITOR	8200pF 50V K	
C635	NCB31HK-681X	C CAPACITOR	680pF 50V K	

⚠Ref No.	Part No.	Part Name	Description	Local
C636	NCB31HK-681X	C CAPACITOR	680pF 50V K	
C638	NCB31EK-223X	C CAPACITOR	0.022uF 25V K	
C639	NCB31HK-104X	C CAPACITOR	0.1uF 50V K	
C640	NCB31CK-105X	C CAPACITOR	1uF 16V K	
C641	NCB31CK-105X	C CAPACITOR	1uF 16V K	
C642	NEHL1CM-106X	E CAPACITOR	10uF 16V M	
C644	NEHL1EM-475X	E CAPACITOR	4.7uF 25V M	
C646	NEHL1EM-475X	E CAPACITOR	4.7uF 25V M	
C647	NCB31CK-105X	C CAPACITOR	1uF 16V K	
C648	NCB31CK-105X	C CAPACITOR	1uF 16V K	
C649	NCB31CK-105X	C CAPACITOR	1uF 16V K	
C650	NCB31CK-105X	C CAPACITOR	1uF 16V K	
C651	NCB31CK-105X	C CAPACITOR	1uF 16V K	
C653	NCB31EK-223X	C CAPACITOR	0.022uF 25V K	
C654	NCB31CK-473X	C CAPACITOR	0.047uF 16V K	
C655	NEHL1CM-106X	E CAPACITOR	10uF 16V M	
C657	NEHL1EM-475X	E CAPACITOR	4.7uF 25V M	
C659	NEHL1EM-475X	E CAPACITOR	4.7uF 25V M	
C660	NCB31CK-105X	C CAPACITOR	1uF 16V K	
C661	NCB31CK-105X	C CAPACITOR	1uF 16V K	
C662	NCB21AK-225X	C CAPACITOR	2.2uF 10V K	
C663	NCB31CK-105X	C CAPACITOR	1uF 16V K	
C664	NCB31CK-105X	C CAPACITOR	1uF 16V K	
C665	NCB31CK-105X	C CAPACITOR	1uF 16V K	
C666	NCB11AK-106X	C CAPACITOR	10uF 10V K	
C667	NCB31CK-105X	C CAPACITOR	1uF 16V K	
C668	NCB31CK-105X	C CAPACITOR	1uF 16V K	
C669	NCB31CK-105X	C CAPACITOR	1uF 16V K	
C670	NCB31CK-105X	C CAPACITOR	1uF 16V K	
C686	NRSA63J-0R0X	MG RESISTOR	0Ω 1/16W J	
C716	NEHL1CM-476X	E CAPACITOR	47uF 16V M	
C717	NCB31AK-105X	C CAPACITOR	1uF 10V K	
C751	NCB31HK-222X	C CAPACITOR	2200pF 50V K	
C752	NEHL1HM-105X	E CAPACITOR	1uF 50V M	
C753	NEHL0GM-227X	E CAPACITOR	220uF 4V M	
C754	NEHL1CM-476X	E CAPACITOR	47uF 16V M	
C755	NEHL0GM-227X	E CAPACITOR	220uF 4V M	
C756	NEHL1HM-105X	E CAPACITOR	1uF 50V M	
C757	NEHL1HM-105X	E CAPACITOR	1uF 50V M	
C758	NCB31HK-222X	C CAPACITOR	2200pF 50V K	
C759	NCB31HK-104X	C CAPACITOR	0.1uF 50V K	
C760	NCB31HK-104X	C CAPACITOR	0.1uF 50V K	
C761	NEHL1AM-107X	E CAPACITOR	100uF 10V M	
C904	NCB11AK-106X	C CAPACITOR	10uF 10V K	
C905	NEHM1CM-476X	E CAPACITOR	47uF 16V M	
C906	NCB31EK-104X	C CAPACITOR	0.1uF 25V K	
C913	NEX51CM-335X	E CAPACITOR	3.3uF 16V M	
C914	NEX50JM-156X	E CAPACITOR	15uF 6.3V M	
C920	NEX50JM-156X	E CAPACITOR	15uF 6.3V M	
C3001	NEHL1CM-476X	E CAPACITOR	47uF 16V M	
C3002	NEHL1HM-106X	E CAPACITOR	10uF 50V M	
C3106	NCF31CZ-104X	C CAPACITOR	0.1uF 16V Z	
C3107	NCF31CZ-104X	C CAPACITOR	0.1uF 16V Z	
C3108	NCB11AK-106X	C CAPACITOR	10uF 10V K	
C3109	NCB31HK-223X	C CAPACITOR	0.022uF 50V K	
C3110	NCB31HK-472X	C CAPACITOR	4700pF 50V K	
C3111	NCB11AK-106X	C CAPACITOR	10uF 10V K	
C3112	NCB31EK-104X	C CAPACITOR	0.1uF 25V K	
C3113	NCB31HK-472X	C CAPACITOR	4700pF 50V K	
C3114	NCB11AK-106X	C CAPACITOR	10uF 10V K	
C3115	NCF31CZ-104X	C CAPACITOR	0.1uF 16V Z	
C3116	NCF31CZ-104X	C CAPACITOR	0.1uF 16V Z	
C3117	NCF31CZ-104X	C CAPACITOR	0.1uF 16V Z	
C3118	NCF31CZ-104X	C CAPACITOR	0.1uF 16V Z	
C3119	NCB21CK-105X	C CAPACITOR	1uF 16V K	
C3120	NCB11AK-106X	C CAPACITOR	10uF 10V K	
C3121	NCB11AK-475X	C CAPACITOR	4.7uF 10V K	
C3122	NCB11AK-335X	C CAPACITOR	3.3uF 10V K	
C3123	NCB31HK-473X	C CAPACITOR	0.047uF 50V K	
C3124	NCB31HK-272X	C CAPACITOR	2700pF 50V K	
C3125	NCB31EK-104X	C CAPACITOR	0.1uF 25V K	
C3126	NCB11AK-475X	C CAPACITOR	4.7uF 10V K	
C3127	NCB31HK-562X	C CAPACITOR	5600pF 50V K	
C3128	NCB31HK-123X	C CAPACITOR	0.012uF 50V K	
C3129	NCB11AK-475X	C CAPACITOR	4.7uF 10V K	
C3130	NCB11AK-475X	C CAPACITOR	4.7uF 10V K	
C3131	NCB11AK-475X	C CAPACITOR	4.7uF 10V K	
C3132	NEHL1CM-476X	E CAPACITOR	47uF 16V M	
C3133	NCB11AK-475X	C CAPACITOR	4.7uF 10V K	
C3134	NCB11AK-106X	C CAPACITOR	10uF 10V K	
C3135	NCB11AK-475X	C CAPACITOR	4.7uF 10V K	
C3136	NCB21CK-105X	C CAPACITOR	1uF 16V K	
C3137	NCB31CK-104X	C CAPACITOR	0.1uF 16V K	
C3155	NCB11CK-225X	C CAPACITOR	2.2uF 16V K	
C3156	NCB11CK-225X	C CAPACITOR	2.2uF 16V K	
R101	NRSA63J-104X	MG RESISTOR	100kΩ 1/16W J	
R102	NRSA63J-104X	MG RESISTOR	100kΩ 1/16W J	
R103	NRSA63J-104X	MG RESISTOR	100kΩ 1/16W J	
R104	NRSA63J-104X	MG RESISTOR	100kΩ 1/16W J	

⚠Ref No.	Part No.	Part Name	Description	Local
R105	NRSA63J-103X	MG RESISTOR	10kΩ 1/16W J	
R106	NRSA63J-103X	MG RESISTOR	10kΩ 1/16W J	
R110	NRSA63J-0R0X	MG RESISTOR	0Ω 1/16W J	
R111	NRSA63J-0R0X	MG RESISTOR	0Ω 1/16W J	
R112	NRSA63J-0R0X	MG RESISTOR	0Ω 1/16W J	
R120	NRSA63J-0R0X	MG RESISTOR	0Ω 1/16W J	
R121	NRSA63J-0R0X	MG RESISTOR	0Ω 1/16W J	
R122	NRSA63J-0R0X	MG RESISTOR	0Ω 1/16W J	
R140	NRSA63J-682X	MG RESISTOR	6.8kΩ 1/16W J	
R141	NRSA63J-682X	MG RESISTOR	6.8kΩ 1/16W J	
R142	NRSA63J-333X	MG RESISTOR	33kΩ 1/16W J	
R143	NRSA63J-682X	MG RESISTOR	6.8kΩ 1/16W J	
R144	NRSA63J-682X	MG RESISTOR	6.8kΩ 1/16W J	
R145	NRSA63J-333X	MG RESISTOR	33kΩ 1/16W J	
R146	NRSA63J-682X	MG RESISTOR	6.8kΩ 1/16W J	
R147	NRSA63J-682X	MG RESISTOR	6.8kΩ 1/16W J	
R150	NRSA63J-333X	MG RESISTOR	33kΩ 1/16W J	
R153	NRSA63J-682X	MG RESISTOR	6.8kΩ 1/16W J	
R154	NRSA63J-682X	MG RESISTOR	6.8kΩ 1/16W J	
R157	NRSA63J-333X	MG RESISTOR	33kΩ 1/16W J	
R158	NRSA63J-0R0X	MG RESISTOR	0Ω 1/16W J	
R159	NRSA63J-0R0X	MG RESISTOR	0Ω 1/16W J	
R160	NRSA63J-0R0X	MG RESISTOR	0Ω 1/16W J	
R161	NRSA63J-0R0X	MG RESISTOR	0Ω 1/16W J	
R164	NRSA63J-224X	MG RESISTOR	220kΩ 1/16W J	
R165	NRSA63J-224X	MG RESISTOR	220kΩ 1/16W J	
R166	NRSA63J-224X	MG RESISTOR	220kΩ 1/16W J	
R167	NRSA63J-224X	MG RESISTOR	220kΩ 1/16W J	
R168	NRSA63J-101X	MG RESISTOR	100Ω 1/16W J	
R169	NRSA63J-101X	MG RESISTOR	100Ω 1/16W J	
R181	NRSA63J-224X	MG RESISTOR	220kΩ 1/16W J	
R183	NRSA63J-274X	MG RESISTOR	270kΩ 1/16W J	
R184	NRSA63J-224X	MG RESISTOR	220kΩ 1/16W J	
R187	NRSA63J-0R0X	MG RESISTOR	0Ω 1/16W J	
R188	NRSA63J-103X	MG RESISTOR	10kΩ 1/16W J	
R195	NRSA63J-0R0X	MG RESISTOR	0Ω 1/16W J	
R197	NRSA63J-0R0X	MG RESISTOR	0Ω 1/16W J	
R198	NRSA63J-0R0X	MG RESISTOR	0Ω 1/16W J	
R203	NRSA63J-0R0X	MG RESISTOR	0Ω 1/16W J	
R204	NRSA63J-0R0X	MG RESISTOR	0Ω 1/16W J	
R206	NRSA63J-562X	MG RESISTOR	5.6kΩ 1/16W J	
R207	NRSA63J-562X	MG RESISTOR	5.6kΩ 1/16W J	
R219	NRSA63J-101X	MG RESISTOR	100Ω 1/16W J	
R220	NRSA63J-101X	MG RESISTOR	100Ω 1/16W J	
R221	NRSA63J-0R0X	MG RESISTOR	0Ω 1/16W J	
R223	NRSA63J-223X	MG RESISTOR	22kΩ 1/16W J	
R224	NRSA63J-223X	MG RESISTOR	22kΩ 1/16W J	
R225	NRSA63J-103X	MG RESISTOR	10kΩ 1/16W J	
R228	NRSA63J-331X	MG RESISTOR	330Ω 1/16W J	
R231	NRSA63J-330X	MG RESISTOR	33Ω 1/16W J	
R232	NRSA63J-471X	MG RESISTOR	470Ω 1/16W J	
R237	NRSA63J-0R0X	MG RESISTOR	0Ω 1/16W J	
R238	NRSA63J-0R0X	MG RESISTOR	0Ω 1/16W J	
R239	NRSA63J-0R0X	MG RESISTOR	0Ω 1/16W J	
R241	NRSA63J-0R0X	MG RESISTOR	0Ω 1/16W J	
R243	NRSA63J-0R0X	MG RESISTOR	0Ω 1/16W J	
R245	NRSA63J-0R0X	MG RESISTOR	0Ω 1/16W J	
R246	NRSA63J-0R0X	MG RESISTOR	0Ω 1/16W J	
R247	NRSA63J-0R0X	MG RESISTOR	0Ω 1/16W J	
R248	NRSA63J-0R0X	MG RESISTOR	0Ω 1/16W J	
R249	NRSA63J-0R0X	MG RESISTOR	0Ω 1/16W J	
R251	NRSA63J-0R0X	MG RESISTOR	0Ω 1/16W J	
R252	NRSA63J-0R0X	MG RESISTOR	0Ω 1/16W J	
R253	NRSA63J-0R0X	MG RESISTOR	0Ω 1/16W J	
R255	NRSA63J-0R0X	MG RESISTOR	0Ω 1/16W J	
R256	NRSA63J-0R0X	MG RESISTOR	0Ω 1/16W J	
R257	NRSA63J-0R0X	MG RESISTOR	0Ω 1/16W J	
R259	NRSA63J-0R0X	MG RESISTOR	0Ω 1/16W J	
R260	NRSA63J-101X	MG RESISTOR	100Ω 1/16W J	
R261	NRSA63J-272X	MG RESISTOR	2.7kΩ 1/16W J	
R262	NRSA63J-101X	MG RESISTOR	100Ω 1/16W J	
R263	NRSA63J-331X	MG RESISTOR	330Ω 1/16W J	
R264	NRSA63J-101X	MG RESISTOR	100Ω 1/16W J	
R265	NRSA63J-331X	MG RESISTOR	330Ω 1/16W J	
R266	NRSA63J-101X	MG RESISTOR	100Ω 1/16W J	
R267	NRSA63J-331X	MG RESISTOR	330Ω 1/16W J	
R280	NRSA63J-104X	MG RESISTOR	100kΩ 1/16W J	
R284	NRSA63J-563X	MG RESISTOR	56kΩ 1/16W J	
R286	NRSA63J-333X	MG RESISTOR	33kΩ 1/16W J	
R288	NRSA63J-820X	MG RESISTOR	82Ω 1/16W J	
R289	NRSA63J-820X	MG RESISTOR	82Ω 1/16W J	
R293	NRSA63J-820X	MG RESISTOR	82Ω 1/16W J	
R294	NRSA63J-0R0X	MG RESISTOR	0Ω 1/16W J	
R295	NRSA63J-104X	MG RESISTOR	100kΩ 1/16W J	
R296	NRSA63J-104X	MG RESISTOR	100kΩ 1/16W J	
R297	NRSA63J-104X	MG RESISTOR	100kΩ 1/16W J	
R301	NRSA63J-0R0X	MG RESISTOR	0Ω 1/16W J	
R302	NRSA63J-0R0X	MG RESISTOR	0Ω 1/16W J	
R303	NRSA63J-0R0X	MG RESISTOR	0Ω 1/16W J	
R382	NRSA63J-0R0X	MG RESISTOR	0Ω 1/16W J	
R384	NRSA63J-0R0X	MG RESISTOR	0Ω 1/16W J	
R385	NRSA63J-0R0X	MG RESISTOR	0Ω 1/16W J	
R391	NRSA63J-101X	MG RESISTOR	100Ω 1/16W J	
R401	NRSA63J-750X	MG RESISTOR	75Ω 1/16W J	
R402	NRSA63J-750X	MG RESISTOR	75Ω 1/16W J	
R403	NRSA63J-750X	MG RESISTOR	75Ω 1/16W J	
R404	NRSA63J-224X	MG RESISTOR	220kΩ 1/16W J	
R405	NRSA63J-224X	MG RESISTOR	220kΩ 1/16W J	
R406	NRSA63J-750X	MG RESISTOR	75Ω 1/16W J	
R407	NRSA63J-750X	MG RESISTOR	75Ω 1/16W J	
R408	NRSA63J-750X	MG RESISTOR	75Ω 1/16W J	
R410	NRSA63J-750X	MG RESISTOR	75Ω 1/16W J	
R411	NRSA63J-750X	MG RESISTOR	75Ω 1/16W J	
R412	NRSA63J-750X	MG RESISTOR	75Ω 1/16W J	
R413	NRSA63J-224X	MG RESISTOR	220kΩ 1/16W J	
R414	NRSA63J-224X	MG RESISTOR	220kΩ 1/16W J	
R418	NRSA63J-750X	MG RESISTOR	75Ω 1/16W J	
R419	NRSA63J-224X	MG RESISTOR	220kΩ 1/16W J	
R420	NRSA63J-224X	MG RESISTOR	220kΩ 1/16W J	
R421	NRSA63J-750X	MG RESISTOR	75Ω 1/16W J	
R422	NRSA63J-750X	MG RESISTOR	75Ω 1/16W J	
R423	NRSA63J-750X	MG RESISTOR	75Ω 1/16W J	
R426	NRSA63J-224X	MG RESISTOR	220kΩ 1/16W J	
R427	NRSA63J-224X	MG RESISTOR	220kΩ 1/16W J	
R437	NRSA63J-391X	MG RESISTOR	390Ω 1/16W J	
R438	NRSA63J-223X	MG RESISTOR	22kΩ 1/16W J	
R439	NRSA63J-471X	MG RESISTOR	470Ω 1/16W J	
R440	NRSA63J-391X	MG RESISTOR	390Ω 1/16W J	
R441	NRSA63J-223X	MG RESISTOR	22kΩ 1/16W J	
R442	NRSA63J-471X	MG RESISTOR	470Ω 1/16W J	
R443	NRSA63J-102X	MG RESISTOR	1kΩ 1/16W J	
R444	NRSA63J-393X	MG RESISTOR	39kΩ 1/16W J	
R461	NRSA63J-750X	MG RESISTOR	75Ω 1/16W J	
R464	NRSA63J-750X	MG RESISTOR	75Ω 1/16W J	
R467	NRSA63J-750X	MG RESISTOR	75Ω 1/16W J	
R475	NRSA63J-331X	MG RESISTOR	330Ω 1/16W J	
R476	NRSA63J-331X	MG RESISTOR	330Ω 1/16W J	
R491	NRSA63J-105X	MG RESISTOR	1MΩ 1/16W J	
R584	NRSA63J-103X	MG RESISTOR	10kΩ 1/16W J	
R585	NRSA63J-103X	MG RESISTOR	10kΩ 1/16W J	
R588	NRSA63J-0R0X	MG RESISTOR	0Ω 1/16W J	
R589	NRSA63J-0R0X	MG RESISTOR	0Ω 1/16W J	
R591	NRSA63J-0R0X	MG RESISTOR	0Ω 1/16W J	
R592	NRSA63J-0R0X	MG RESISTOR	0Ω 1/16W J	
R621	NRSA63J-563X	MG RESISTOR	56kΩ 1/16W J	
R622	NRSA63J-153X	MG RESISTOR	15kΩ 1/16W J	
R623	NRSA63J-104X	MG RESISTOR	100kΩ 1/16W J	
R624	NRSA63J-102X	MG RESISTOR	1kΩ 1/16W J	
R625	NRSA63J-563X	MG RESISTOR	56kΩ 1/16W J	
R626	NRSA63J-563X	MG RESISTOR	56kΩ 1/16W J	
R634	NRSA63J-153X	MG RESISTOR	15kΩ 1/16W J	
R635	NRSA63J-563X	MG RESISTOR	56kΩ 1/16W J	
R636	NRSA63J-473X	MG RESISTOR	47kΩ 1/16W J	
R638	NRSA63J-183X	MG RESISTOR	18kΩ 1/16W J	
R639	NRSA63J-821X	MG RESISTOR	820Ω 1/16W J	
R640	NRSA63J-821X	MG RESISTOR	820Ω 1/16W J	
R642	NRSA63J-562X	MG RESISTOR	5.6kΩ 1/16W J	
R644	NRSA63J-392X	MG RESISTOR	3.9kΩ 1/16W J	
R647	NRSA63J-183X	MG RESISTOR	18kΩ 1/16W J	
R649	NRSA63J-683X	MG RESISTOR	68kΩ 1/16W J	
R650	NRSA63J-333X	MG RESISTOR	33kΩ 1/16W J	
R651	NRSA63J-101X	MG RESISTOR	100Ω 1/16W J	
R652	NRSA63J-101X	MG RESISTOR	100Ω 1/16W J	
R654	NRSA63J-182X	MG RESISTOR	1.8kΩ 1/16W J	
R674	NRSA63J-0R0X	MG RESISTOR	0Ω 1/16W J	
R675	NRSA63J-0R0X	MG RESISTOR	0Ω 1/16W J	
R687	NRSA63J-103X	MG RESISTOR	10kΩ 1/16W J	
R694	NRSA63J-0R0X	MG RESISTOR	0Ω 1/16W J	
R695	NRSA63J-0R0X	MG RESISTOR	0Ω 1/16W J	
R696	NRSA63J-0R0X	MG RESISTOR	0Ω 1/16W J	
R700	NRSA63J-101X	MG RESISTOR	100Ω 1/16W J	
R702	NRSA63J-101X	MG RESISTOR	100Ω 1/16W J	
R703	NRSA63J-101X	MG RESISTOR	100Ω 1/16W J	
R704	NRSA63J-101X	MG RESISTOR	100Ω 1/16W J	
R718	NRSA63J-104X	MG RESISTOR	100kΩ 1/16W J	
R719	NRSA63J-563X	MG RESISTOR	56kΩ 1/16W J	
R720	NRSA63J-153X	MG RESISTOR	15kΩ 1/16W J	
R723	NRSA63J-223X	MG RESISTOR	22kΩ 1/16W J	
R751	NRSA63J-102X	MG RESISTOR	1kΩ 1/16W J	
R752	NRSA63J-101X	MG RESISTOR	100Ω 1/16W J	
R755	NRSA63J-0R0X	MG RESISTOR	0Ω 1/16W J	
R756	NRSA63J-0R0X	MG RESISTOR	0Ω 1/16W J	
R757	NRSA63J-472X	MG RESISTOR	4.7kΩ 1/16W J	
R758	NRSA63J-104X	MG RESISTOR	100kΩ 1/16W J	
R759	NRSA63J-0R0X	MG RESISTOR	0Ω 1/16W J	
R760	NRSA63J-473X	MG RESISTOR	47kΩ 1/16W J	
R761	NRSA63J-0R0X	MG RESISTOR	0Ω 1/16W J	
R764	NRSA63J-102X	MG RESISTOR	1kΩ 1/16W J	
R765	NRSA63J-220X	MG RESISTOR	22Ω 1/16W J	
R768	NRSA63J-102X	MG RESISTOR	1kΩ 1/16W J	

⚠Ref No.	Part No.	Part Name	Description Local
R769	NRSA63J-220X	MG RESISTOR	22Ω 1/16W J
R3001	NRSA63J-473X	MG RESISTOR	47kΩ 1/16W J
R3003	NRSA63J-0R0X	MG RESISTOR	0Ω 1/16W J
R3004	NRSA63J-0R0X	MG RESISTOR	0Ω 1/16W J
R3005	NRSA63J-103X	MG RESISTOR	10kΩ 1/16W J
R3006	NRSA63J-273X	MG RESISTOR	27kΩ 1/16W J
R3007	NRSA63J-103X	MG RESISTOR	10kΩ 1/16W J
R3018	NRSA63J-0R0X	MG RESISTOR	0Ω 1/16W J
R3119	NRSA63J-225X	MG RESISTOR	2.2MΩ 1/16W J
R3122	NRSA63J-392X	MG RESISTOR	3.9kΩ 1/16W J
R3123	NRSA63J-302X	MG RESISTOR	3kΩ 1/16W J
R3125	NRSA63J-332X	MG RESISTOR	3.3kΩ 1/16W J
R3126	NRSA63J-221X	MG RESISTOR	220Ω 1/16W J
R3128	NRSA63J-105X	MG RESISTOR	1MΩ 1/16W J
R3129	NRSA63J-104X	MG RESISTOR	100kΩ 1/16W J
R3131	NRSA63J-683X	MG RESISTOR	68kΩ 1/16W J
R3132	NRSA63J-123X	MG RESISTOR	12kΩ 1/16W J
R3133	NRSA63J-682X	MG RESISTOR	6.8kΩ 1/16W J
R3167	NRSA63J-221X	MG RESISTOR	220Ω 1/16W J
L101	NQL79GM-100X	COIL	10uH M
L902	NQL52EM-220X	COIL	22uH M
L903	NQR0562-010X	CHOKE COIL	
L906	NQL52EM-220X	COIL	22uH M
L3001	NQL79GM-4R7X	COIL	4.7uH M
L3002	NRSA02J-0R0X	MG RESISTOR	0Ω 1/10W J
CN001	QGF0508C2-50W	CONNECTOR	FFC/FPC (1-50)
CN002	QGF0508C2-40W	CONNECTOR	FFC/FPC (1-40)
J401	QNZ0726-001	AV JACK	INPUT-1(S/V/L/R)
J402	QNN0650-001	PIN JACK	INPUT-1(COMPONENT)
J403	QNZ0726-001	AV JACK	INPUT-2(S/V/L/R)
J405	QNN0651-001	PIN JACK	INPUT-3(V/L/R)
J406	QNN0650-001	PIN JACK	INPUT-3(COMPONENT)
J407	QNN0652-001	PIN JACK	FOR HDMI-1
J410	QNZ0561-001	D CONNECTOR	PC IN
J412	QNN0652-001	PIN JACK	AUDIO OUT
K662	NRSA63J-0R0X	MG RESISTOR	0Ω 1/16W J
K663	NRSA63J-0R0X	MG RESISTOR	0Ω 1/16W J
TU3001	QAU0467-001	TUNER	

OPTICAL P.W. BOARD ASS'Y (SFL-2501A-M2)

⚠Ref No.	Part No.	Part Name	Description Local
IC2501	QNZ0727-001	OPT CONNECTOR	OPTICAL OUT
C2501	NCB31HK-104X	C CAPACITOR	0.1uF 50V K
R2501	NRSA63J-0R0X	MG RESISTOR	0Ω 1/16W J

D-AMP P.W. BOARD ASS'Y (SFL-6301A-M2)

⚠Ref No.	Part No.	Part Name	Description Local
IC6201	PQ20WZ11-X	IC	
IC6501	RC4558D-X	IC	
IC6621	LM393DR-X	IC	
IC6661	TDA8928ST/N1	IC	
Q6661	UN2112-X	DIGI TRANSISTOR	
Q6662	2SC1623A/5-6/-X	TRANSISTOR	
Q6663	UN2212-X	DIGI TRANSISTOR	
D6201	1SS355W-X	DIODE	
D6501	UDZW6.2B-X	Z DIODE	
D6663	UDZW3.3B-X	Z DIODE	
D6664	1SS355W-X	DIODE	
D6671	UDZW20B-X	Z DIODE	
D6672	UDZW20B-X	Z DIODE	
D6673	UDZW20B-X	Z DIODE	
D6674	UDZW20B-X	Z DIODE	
C6201	NCB31HK-103X	C CAPACITOR	0.01uF 50V K
C6202	NEHL1EM-336X	E CAPACITOR	33uF 25V M
C6203	NEHL1EM-336X	E CAPACITOR	33uF 25V M
C6204	NCB31EK-104X	C CAPACITOR	0.1uF 25V K
C6205	NCB31HK-103X	C CAPACITOR	0.01uF 50V K
C6501	NENA1CM-475X	BP E CAPACITOR	4.7uF 16V M
C6502	NENA1CM-475X	BP E CAPACITOR	4.7uF 16V M
C6503	NDC31HJ-100X	C CAPACITOR	10pF 50V J
C6504	NDC31HJ-100X	C CAPACITOR	10pF 50V J
C6505	NEHL1CM-476X	E CAPACITOR	47uF 16V M
C6506	NEHL1CM-476X	E CAPACITOR	47uF 16V M
C6507	NEHL1HM-105X	E CAPACITOR	1uF 50V M
C6508	NEHL1HM-105X	E CAPACITOR	1uF 50V M
C6601	NDC31HJ-101X	C CAPACITOR	100pF 50V J
C6602	NDC31HJ-101X	C CAPACITOR	100pF 50V J
C6621	NCB31HK-332X	C CAPACITOR	3300pF 50V K
C6622	NCB31HK-104X	C CAPACITOR	0.1uF 50V K
C6623	NEHL1EM-226X	E CAPACITOR	22uF 25V M
C6624	NCB31HK-222X	C CAPACITOR	2200pF 50V K
C6625	NCB31CK-104X	C CAPACITOR	0.1uF 16V K
C6626	NCB31HK-472X	C CAPACITOR	4700pF 50V K
C6627	NCB31HK-104X	C CAPACITOR	0.1uF 50V K
C6628	NEHL1EM-226X	E CAPACITOR	22uF 25V M
C6629	NCB31HK-472X	C CAPACITOR	4700pF 50V K
C6630	NCB31CK-104X	C CAPACITOR	0.1uF 16V K
C6631	NCB31HK-222X	C CAPACITOR	2200pF 50V K
C6632	NCB31HK-332X	C CAPACITOR	3300pF 50V K
C6661	NCB11EK-105X	C CAPACITOR	1uF 25V K
C6662	NCB11EK-105X	C CAPACITOR	1uF 25V K
C6663	NCB31HK-104X	C CAPACITOR	0.1uF 50V K
C6664	QETN1HM-226Z	E CAPACITOR	22uF 50V M
C6665	NCB31HK-104X	C CAPACITOR	0.1uF 50V K
C6666	QETN1HM-226Z	E CAPACITOR	22uF 50V M
C6667	NCB31HK-104X	C CAPACITOR	0.1uF 50V K
C6668	NCB31HK-561X	C CAPACITOR	560pF 50V K
C6669	QFV21HJ-224Z	MF CAPACITOR	0.22uF 50V J
C6670	QFVF1HJ-184Z	MF CAPACITOR	0.18uF 50V J
C6671	NCB31HK-153X	C CAPACITOR	0.015uF 50V K
C6672	QETN1EM-477Z	E CAPACITOR	470uF 25V M
C6673	NCB31HK-104X	C CAPACITOR	0.1uF 50V K
C6674	QETN1EM-477Z	E CAPACITOR	470uF 25V M
C6675	NCB31HK-104X	C CAPACITOR	0.1uF 50V K
C6676	NCB31HK-561X	C CAPACITOR	560pF 50V K
C6677	NCB31HK-561X	C CAPACITOR	560pF 50V K
C6678	QFV21HJ-224Z	MF CAPACITOR	0.22uF 50V J
C6679	QFVF1HJ-184Z	MF CAPACITOR	0.18uF 50V J
C6680	NCB31HK-153X	C CAPACITOR	0.015uF 50V K
C6681	NCB31HK-561X	C CAPACITOR	560pF 50V K
C6682	NCB31HK-104X	C CAPACITOR	0.1uF 50V K
C6683	NCB31HK-104X	C CAPACITOR	0.1uF 50V K
C6684	NCB31HK-104X	C CAPACITOR	0.1uF 50V K
C6685	QETN1EM-477Z	E CAPACITOR	470uF 25V M
C6686	NCB31HK-104X	C CAPACITOR	0.1uF 50V K
C6687	QETN1EM-477Z	E CAPACITOR	470uF 25V M
R6201	NRSA63J-0R0X	MG RESISTOR	0Ω 1/16W J
R6202	NRSA63J-182X	MG RESISTOR	1.8kΩ 1/16W J
R6203	NRSA63J-183X	MG RESISTOR	18kΩ 1/16W J
R6204	NRSA63J-562X	MG RESISTOR	5.6kΩ 1/16W J
R6205	NRSA63J-473X	MG RESISTOR	47kΩ 1/16W J
R6501	NRSA63J-822X	MG RESISTOR	8.2kΩ 1/16W J
R6502	NRSA63J-103X	MG RESISTOR	10kΩ 1/16W J
R6503	NRSA63J-104X	MG RESISTOR	100kΩ 1/16W J
R6504	NRSA63J-822X	MG RESISTOR	8.2kΩ 1/16W J
R6505	NRSA63J-103X	MG RESISTOR	10kΩ 1/16W J
R6506	NRSA63J-104X	MG RESISTOR	100kΩ 1/16W J
R6507	NRSA63J-562X	MG RESISTOR	5.6kΩ 1/16W J
R6601	NRSA63J-102X	MG RESISTOR	1kΩ 1/16W J
R6602	NRSA63J-333X	MG RESISTOR	33kΩ 1/16W J
R6603	NRSA63J-0R0X	MG RESISTOR	0Ω 1/16W J
R6605	NRSA63J-102X	MG RESISTOR	1kΩ 1/16W J
R6606	NRSA63J-333X	MG RESISTOR	33kΩ 1/16W J
R6607	NRSA63J-0R0X	MG RESISTOR	0Ω 1/16W J
R6621	NRSA63J-101X	MG RESISTOR	100Ω 1/16W J
R6622	NRSA63J-103X	MG RESISTOR	10kΩ 1/16W J
R6623	NRSA63J-392X	MG RESISTOR	3.9kΩ 1/16W J
R6624	QRJ146J-102X	UNF C RESISTOR	1kΩ 1/4W J
R6625	NRSA63J-102X	MG RESISTOR	1kΩ 1/16W J
R6626	NRSA63J-152X	MG RESISTOR	1.5kΩ 1/16W J
R6627	NRSA63J-104X	MG RESISTOR	100kΩ 1/16W J
R6629	NRSA63J-104X	MG RESISTOR	100kΩ 1/16W J
R6630	NRSA63J-152X	MG RESISTOR	1.5kΩ 1/16W J
R6631	NRSA63J-102X	MG RESISTOR	1kΩ 1/16W J
R6632	NRSA63J-392X	MG RESISTOR	3.9kΩ 1/16W J
R6633	NRSA63J-151X	MG RESISTOR	150Ω 1/16W J
R6634	NRSA63J-103X	MG RESISTOR	10kΩ 1/16W J
R6661	NRSA63J-102X	MG RESISTOR	1kΩ 1/16W J
R6662	NRSA63J-102X	MG RESISTOR	1kΩ 1/16W J
R6663	NRSA63J-393X	MG RESISTOR	39kΩ 1/16W J
R6664	NRSA63J-0R0X	MG RESISTOR	0Ω 1/16W J
R6665	NRSA63J-393X	MG RESISTOR	39kΩ 1/16W J
R6666	QRK126J-5R6X	UNF C RESISTOR	5.6Ω 1/2W J
R6667	QRK126J-220X	UNF C RESISTOR	22Ω 1/2W J
R6668	QRK126J-5R6X	UNF C RESISTOR	5.6Ω 1/2W J
R6669	QRK126J-220X	UNF C RESISTOR	22Ω 1/2W J
R6670	NRSA63J-153X	MG RESISTOR	15kΩ 1/16W J
R6671	NRSA63J-103X	MG RESISTOR	10kΩ 1/16W J
R6673	NRSA63J-222X	MG RESISTOR	2.2kΩ 1/16W J
R6674	NRSA63J-472X	MG RESISTOR	4.7kΩ 1/16W J
R6675	NRSA63J-273X	MG RESISTOR	27kΩ 1/16W J
R6676	NRSA63J-102X	MG RESISTOR	1kΩ 1/16W J

⚠Ref No.	Part No.	Part Name	Description	Local
R6677	NRSA63J-102X	MG RESISTOR	1kΩ 1/16W J	
R6680	NRSA63J-103X	MG RESISTOR	10kΩ 1/16W J	
R6691	NRSA63J-333X	MG RESISTOR	33kΩ 1/16W J	
L6661	NQLC8CM-560X	COIL	56uH M	
L6662	NQLC8CM-560X	COIL	56uH M	
K6601	NQR0499-002X	FERRITE BEADS		
K6602	NQR0499-002X	FERRITE BEADS		
K6661	NQR0499-002X	FERRITE BEADS		
K6662	NQR0499-002X	FERRITE BEADS		
K6663	NQR0499-002X	FERRITE BEADS		
K6664	NQR0499-002X	FERRITE BEADS		

SW P.W. BOARD ASS'Y (SFL-7207A-M2)

⚠Ref No.	Part No.	Part Name	Description	Local
D7011	UDZW6.2B-X	Z DIODE		
C7011	NCB31HK-104X	C CAPACITOR	0.1uF 50V K	
C7012	NCB31HK-104X	C CAPACITOR	0.1uF 50V K	
R7011	NRSA63J-102X	MG RESISTOR	1kΩ 1/16W J	
R7012	NRSA63J-102X	MG RESISTOR	1kΩ 1/16W J	
R7013	NRSA63J-0R0X	MG RESISTOR	0Ω 1/16W J	
R7014	NRSA63J-0R0X	MG RESISTOR	0Ω 1/16W J	
R7015	NRSA63J-103X	MG RESISTOR	10kΩ 1/16W J	
R7016	NRSA63J-101X	MG RESISTOR	100Ω 1/16W J	
R7017	NRSA63J-0R0X	MG RESISTOR	0Ω 1/16W J	
R7701	NRSA63J-562X	MG RESISTOR	5.6kΩ 1/16W J	
R7702	NRSA63J-153X	MG RESISTOR	15kΩ 1/16W J	
R7703	NRSA63J-562X	MG RESISTOR	5.6kΩ 1/16W J	
R7704	NRSA63J-153X	MG RESISTOR	15kΩ 1/16W J	
R7705	NRSA63J-0R0X	MG RESISTOR	0Ω 1/16W J	
R7706	NRSA63J-0R0X	MG RESISTOR	0Ω 1/16W J	
R7709	NRSA63J-0R0X	MG RESISTOR	0Ω 1/16W J	
R7712	NRSA63J-0R0X	MG RESISTOR	0Ω 1/16W J	
L7001	NRSA02J-0R0X	MG RESISTOR	0Ω 1/10W J	
L7002	NRSA02J-0R0X	MG RESISTOR	0Ω 1/10W J	
J7001	QNS0051-001	3.5 JACK	HEADPHONE	
K7001	NRSA63J-0R0X	MG RESISTOR	0Ω 1/16W J	
S7701	QSW0619-003Z	PUSH SWITCH	CH-	
S7702	QSW0619-003Z	PUSH SWITCH	CH+	
S7703	QSW0619-003Z	PUSH SWITCH	MENU	
S7704	QSW0619-003Z	PUSH SWITCH	INPUT	
S7705	QSW0619-003Z	PUSH SWITCH	VOL+	
S7706	QSW0619-003Z	PUSH SWITCH	VOL-	
S7707	QSW0619-003Z	PUSH SWITCH	POWER	

LED P.W. BOARD ASS'Y (SFL-8901A-M2)

⚠Ref No.	Part No.	Part Name	Description	Local
IC8951	S9648	PHOTO CONDUCTOR		
IC8952	GP1UM261RKVF	IR DETECT UNIT		
Q8905	RT1P440C-X	DIGI TRANSISTOR		
Q8906	RT1P440C-X	DIGI TRANSISTOR		
Q8907	RT1P440C-X	DIGI TRANSISTOR		
Q8908	RT1N241C-X	DIGI TRANSISTOR		
Q8909	RT1N241C-X	DIGI TRANSISTOR		
D8902	SEL5E20C-T	LED	POWER	
D8906	MA8068-X	Z DIODE		
D8907	MA8068-X	Z DIODE		
C8951	NEHL1EM-226X	E CAPACITOR	22uF 25V M	
C8952	NEHL1CM-476X	E CAPACITOR	47uF 16V M	
R8914	NRSA63J-271X	MG RESISTOR	270Ω 1/16W J	
R8915	NRSA63J-151X	MG RESISTOR	150Ω 1/16W J	
R8916	NRSA63J-103X	MG RESISTOR	10kΩ 1/16W J	
R8917	NRSA63J-103X	MG RESISTOR	10kΩ 1/16W J	
R8929	NRSA63J-0R0X	MG RESISTOR	0Ω 1/16W J	
R8930	NRSA63J-0R0X	MG RESISTOR	0Ω 1/16W J	
R8931	NRSA63J-0R0X	MG RESISTOR	0Ω 1/16W J	
R8951	NRSA63J-334X	MG RESISTOR	330kΩ 1/16W J	
R8952	NRSA63J-101X	MG RESISTOR	100Ω 1/16W J	
R8953	NRSA63J-683X	MG RESISTOR	68kΩ 1/16W J	
R8954	NRSA63J-333X	MG RESISTOR	33kΩ 1/16W J	
R8955	NRSA63J-102X	MG RESISTOR	1kΩ 1/16W J	

POWER P.W. BOARD ASS'Y (SFL-9048A-M2)

⚠Ref No.	Part No.	Part Name	Description	Local
IC9202	BA50BC0FP-X	IC		
IC9301	LM393DR-X	IC		
IC9501	STR-X6737M-F2	IC		
Q9001	2SC3928A/QR/-X	TRANSISTOR		
Q9503	2SC3928A/QR/-X	TRANSISTOR		
Q9505	2SC3928A/QR/-X	TRANSISTOR		
⚠D9001	D25XB60	BRIDGE DIODE		
D9002	MA111-X	SI DIODE		
D9201	D2SBA60	BRIDGE DIODE		
D9202	MA8047-X	Z DIODE		
D9301	MA8091/M/-X	Z DIODE		
D9302	MA111-X	SI DIODE		
D9501	MA111-X	SI DIODE		
D9502	MTZJ33B-T2	Z DIODE		
D9503	MA111-X	SI DIODE		
D9504	D1FL20U-X	SI DIODE		
D9505	D1FL20U-X	SI DIODE		
D9506	SARS01-T2	FR DIODE		
D9507	SARS01-T2	FR DIODE		
D9508	FR105GT-T3	SI DIODE		
D9509	RL2Z-LFC4	SI DIODE		
D9510	RL2Z-LFC4	SI DIODE		
D9511	FMX-G22S	SI DIODE		
D9512	FMX-G22S	SI DIODE		
D9513	FMX-G22S	SI DIODE		
D9514	FR105GT-T3	SI DIODE		
D9515	UTCTL431-T	IC		
D9516	MA3100/H/-X	Z DIODE		
D9517	MA3100/H/-X	Z DIODE		
D9518	MA111-X	SI DIODE		
D9519	MA8033-X	Z DIODE		
D9520	MA111-X	SI DIODE		
D9521	MA3100/H/-X	Z DIODE		
⚠C9001	QFZ9072-105	MM CAPACITOR	1uF AC250V K	
⚠C9002	QFZ9072-105	MM CAPACITOR	1uF AC250V K	
⚠C9007	QCZ9071-102	C CAPACITOR	1000pF AC400V M	
⚠C9008	QCZ9071-102	C CAPACITOR	1000pF AC400V M	
⚠C9012	QCZ9071-102	C CAPACITOR	1000pF AC400V M	
C9204	QEHR2EM-475Z	E CAPACITOR	4.7uF 250V M	
C9206	QEHR1HM-105Z	E CAPACITOR	1uF 50V M	
⚠C9209	QCZ9071-102	C CAPACITOR	1000pF AC400V M	
C9211	QECR1CM-477Z	E CAPACITOR	470uF 16V M	
C9212	QEHR1AM-337Z	E CAPACITOR	330uF 10V M	
C9213	QEHR1CM-107Z	E CAPACITOR	100uF 16V M	
C9215	NCB31HK-104X	C CAPACITOR	0.1uF 50V K	
C9301	NEHM1HM-105X	E CAPACITOR	1uF 50V M	
C9302	NCB31EK-104X	C CAPACITOR	0.1uF 25V K	
C9303	NCB31EK-104X	C CAPACITOR	0.1uF 25V K	
C9304	NCB31EK-104X	C CAPACITOR	0.1uF 25V K	
C9501	NCB31HK-104X	C CAPACITOR	0.1uF 50V K	
C9502	QEHR1HM-335Z	E CAPACITOR	3.3uF 50V M	
C9503	NCB31HK-102X	C CAPACITOR	1000pF 50V K	
C9504	NCB31HK-104X	C CAPACITOR	0.1uF 50V K	
C9505	NCB31HK-471X	C CAPACITOR	470pF 50V K	
C9506	QCZ0354-152Z	C CAPACITOR	1500pF 2kV K	
C9507	QEZ0599-108	E CAPACITOR	1000uF 200V M	
C9508	QFP32JK-332	PP CAPACITOR	3300pF 630V K	
C9509	QEHR1HM-336Z	E CAPACITOR	33uF 50V M	
C9518	QEHR2AM-226Z	E CAPACITOR	22uF 100V M	
C9519	QECQ1VM-128	E CAPACITOR	1200uF 35V M	
C9520	QECQ1VM-128	E CAPACITOR	1200uF 35V M	
C9521	QECQ1VM-128	E CAPACITOR	1200uF 35V M	
C9522	NCB31HK-104X	C CAPACITOR	0.1uF 50V K	
C9523	QECQ1EM-188	E CAPACITOR	1800uF 25V M	
C9524	QECQ1EM-188	E CAPACITOR	1800uF 25V M	
C9525	QECR1EM-687Z	E CAPACITOR	680uF 25V M	
C9526	QECR1EM-687Z	E CAPACITOR	680uF 25V M	
C9527	QECR1EM-227Z	E CAPACITOR	220uF 25V M	
C9528	QECR1VM-227Z	E CAPACITOR	220uF 35V M	
C9529	QEHR1HM-105Z	E CAPACITOR	1uF 50V M	
C9530	NCB31HK-222X	C CAPACITOR	2200pF 50V K	
⚠R9001	QRZ9046-105Z	C RESISTOR	1MΩ 1/2W K	
R9003	NRSA63J-222X	MG RESISTOR	2.2kΩ 1/16W J	
R9004	NRSA63J-473X	MG RESISTOR	47kΩ 1/16W J	
R9006	QRF104K-1R0	UNF WW RESISTOR	1Ω 10W K	
R9201	NRS12BJ-563W	MG RESISTOR	56kΩ 1/2W J	
R9204	NRS12BJ-333W	MG RESISTOR	33kΩ 1/2W J	
⚠R9209	QRZ9046-685Z	C RESISTOR	6.8MΩ 1/2W K	
R9217	NRSA63J-183X	MG RESISTOR	18kΩ 1/16W J	
R9301	NRS12BJ-332W	MG RESISTOR	3.3kΩ 1/2W J	
R9302	NRSA63D-472X	MG RESISTOR	4.7kΩ 1/16W D	
R9303	NRSA63D-472X	MG RESISTOR	4.7kΩ 1/16W D	
R9304	NRSA63J-682X	MG RESISTOR	6.8kΩ 1/16W J	
R9305	NRSA63J-273X	MG RESISTOR	27kΩ 1/16W J	

⚠Ref No.	Part No.	Part Name	Description Local
R9306	NRSA63J-472X	MG RESISTOR	4.7kΩ 1/16W J
R9501	NRS12BJ-224W	MG RESISTOR	220kΩ 1/2W J
R9502	NRS12BJ-224W	MG RESISTOR	220kΩ 1/2W J
R9503	NRSA63J-473X	MG RESISTOR	47kΩ 1/16W J
R9504	NRSA63J-102X	MG RESISTOR	1kΩ 1/16W J
R9505	QRK126J-101X	UNF C RESISTOR	100Ω 1/2W J
R9506	QRT029J-R18	MF RESISTOR	0.18Ω 2W J
R9507	QRT029J-R18	MF RESISTOR	0.18Ω 2W J
R9508	NRSA63J-332X	MG RESISTOR	3.3kΩ 1/16W J
R9509	QRL039J-220	OMF RESISTOR	22Ω 3W J
R9510	QRE121J-564Y	C RESISTOR	560kΩ 1/2W J
⚠R9512	QRE121J-470Y	C RESISTOR	47Ω 1/2W J
R9513	NRSA63J-102X	MG RESISTOR	1kΩ 1/16W J
R9514	NRSA63J-102X	MG RESISTOR	1kΩ 1/16W J
R9515	QRG01GJ-821	OMF RESISTOR	820Ω 1W J
R9516	QRG01GJ-821	OMF RESISTOR	820Ω 1W J
R9517	NRSA63J-123X	MG RESISTOR	12kΩ 1/16W J
R9518	NRSA63D-273X	MG RESISTOR	27kΩ 1/16W D
R9519	NRSA63J-152X	MG RESISTOR	1.5kΩ 1/16W J
R9520	NRSA63D-332X	MG RESISTOR	3.3kΩ 1/16W D
R9521	NRSA63J-0R0X	MG RESISTOR	0Ω 1/16W J
R9525	NRSA63J-822X	MG RESISTOR	8.2kΩ 1/16W J
R9526	NRSA63J-102X	MG RESISTOR	1kΩ 1/16W J
R9527	NRSA63J-473X	MG RESISTOR	47kΩ 1/16W J
R9528	QRL029J-152	OMF RESISTOR	1.5kΩ 2W J
R9529	QRG01GJ-473	OMF RESISTOR	47kΩ 1W J
R9531	NRS12BJ-102W	MG RESISTOR	1kΩ 1/2W J
R9532	NRSA63J-822X	MG RESISTOR	8.2kΩ 1/16W J
R9533	NRSA63J-102X	MG RESISTOR	1kΩ 1/16W J
R9534	NRSA63J-473X	MG RESISTOR	47kΩ 1/16W J
L9201	QQL26AM-5R6Z	CHOKE COIL	5.6uH M
L9502	QQL26AM-5R6Z	CHOKE COIL	5.6uH M
L9503	QQL26AM-5R6Z	CHOKE COIL	5.6uH M
L9504	NRSA02J-0R0X	MG RESISTOR	0Ω 1/10W J
⚠T9201	QAL0724-001	POWER TRANSF	
⚠T9501	QQS0361-001	SW TRANSF	
⚠CP9201	QMFZ049-2R0-E	FUSE	2A 125V
⚠CP9501	QMFZ049-5R0-E	FUSE	5A 125V
⚠CP9502	QMFZ049-5R0-E	FUSE	5A 125V
⚠CP9503	ICP-N70-T	IC PROTECTOR	2.5A
⚠CP9504	ICP-N70-T	IC PROTECTOR	2.5A
⚠CP9505	ICP-N70-T	IC PROTECTOR	2.5A
⚠CP9506	QMFZ049-5R0-E	FUSE	5A 125V
⚠F9001	QMF5AD2-6R3-J1	FUSE	6.3A AC250V
K9202	NRSA02J-0R0X	MG RESISTOR	0Ω 1/10W J
K9501	QRN143J-0R0X	C RESISTOR	0Ω 1/4W J
K9503	QRN143J-0R0X	C RESISTOR	0Ω 1/4W J
K9505	QRN143J-0R0X	C RESISTOR	0Ω 1/4W J
K9506	QRN143J-0R0X	C RESISTOR	0Ω 1/4W J
K9507	QRN143J-0R0X	C RESISTOR	0Ω 1/4W J
K9508	QRN143J-0R0X	C RESISTOR	0Ω 1/4W J
K9512	NRSA02J-0R0X	MG RESISTOR	0Ω 1/10W J
K9513	NRSA02J-0R0X	MG RESISTOR	0Ω 1/10W J
K9514	NRSA02J-0R0X	MG RESISTOR	0Ω 1/10W J
K9515	NRSA02J-0R0X	MG RESISTOR	0Ω 1/10W J
⚠LF9001	QQR1467-001	LINE FILTER	
⚠LF9002	QQR1281-004	LINE FILTER	
⚠LF9003	QQR1514-001	LINE FILTER	
⚠PC9201	PS2581AL2/QW/-W	PHOTO COUPLER	
⚠PC9501	PS2581AL2/QW/-W	PHOTO COUPLER	
⚠RY9001	QSK0162-001	RELAY	
⚠VA9001	QAF0072-621	VARISTOR	620V

DC-DC P.W. BOARD ASS'Y (SFL-9154A-M2)

⚠Ref No.	Part No.	Part Name	Description Local
IC9601	MP2363DN-X	IC	
IC9602	MP2363DN-X	IC	
IC9701	MP2363DN-X	IC	
IC9751	MP2363DN-X	IC	
IC9801	MP2363DN-X	IC	
IC9851	PQ090DNA1Z-X	IC	
IC9852	PQ090DNA1Z-X	IC	
IC9901	PQ20WZ11-X	IC	
Q9601	2SC3928A/QR/-X	TRANSISTOR	
Q9651	2SC3928A/QR/-X	TRANSISTOR	
Q9801	2SC3928A/QR/-X	TRANSISTOR	
Q9904	2SB1188/QR/-W	TRANSISTOR	
Q9905	UN2213-X	DIGI TRANSISTOR	
D9601	EC30HA04-X	SB DIODE	
D9602	MA111-X	SI DIODE	
D9603	MA8030/H/-X	Z DIODE	
D9604	PTZ6.8B-X	Z DIODE	
D9605	EC30HA04-X	SB DIODE	
D9606	EC30HA04-X	SB DIODE	
D9652	EC30HA04-X	SB DIODE	
D9653	EC30HA04-X	SB DIODE	
D9654	PTZ16B-X	Z DIODE	
D9655	MA111-X	SI DIODE	
D9656	EC30HA04-X	SB DIODE	
D9701	EC30HA03L-X	SB DIODE	
D9702	EC30HA03L-X	SB DIODE	
D9703	PTZ3.9B-X	Z DIODE	
D9751	EC30HA03L-X	SB DIODE	
D9752	EC30HA03L-X	SB DIODE	
D9753	PTZ3.9B-X	Z DIODE	
D9801	EC30HA04-X	SB DIODE	
D9802	EC30HA04-X	SB DIODE	
D9803	MA111-X	SI DIODE	
D9804	PTZ6.8B-X	Z DIODE	
D9901	D1FS4-X	SB DIODE	
D9905	MA111-X	SI DIODE	
C9601	NCJ41HK-335X-U	C CAPACITOR	3.3uF 50V K
C9602	NCJ41HK-335X-U	C CAPACITOR	3.3uF 50V K
C9603	NCB31HK-103X	C CAPACITOR	0.01uF 50V K
C9604	NCJ41CK-226X-U	C CAPACITOR	22mF 16V K
C9605	NCJ41CK-226X-U	C CAPACITOR	22mF 16V K
C9606	NCB31HK-104X	C CAPACITOR	0.1uF 50V K
C9607	NCB31HK-222X	C CAPACITOR	2200pF 50V K
C9608	NCB31HK-332X	C CAPACITOR	3300pF 50V K
C9610	NEHM1HM-105X	E CAPACITOR	1uF 50V M
C9611	QEHR0JM-108Z	E CAPACITOR	1000uF 6.3V M
C9651	NCJ41HK-335X-U	C CAPACITOR	3.3uF 50V K
C9652	NCB31HK-103X	C CAPACITOR	0.01uF 50V K
C9653	NCJ41EK-106X-U	C CAPACITOR	10mF 25V K
C9654	NCJ41EK-106X-U	C CAPACITOR	10mF 25V K
C9655	NCJ41EK-106X-U	C CAPACITOR	10mF 25V K
C9656	NCB31HK-104X	C CAPACITOR	0.1uF 50V K
C9657	NCB31HK-222X	C CAPACITOR	2200pF 50V K
C9658	NCB31HK-332X	C CAPACITOR	3300pF 50V K
C9660	NEX61CM-686X	E CAPACITOR	68uF 16V M
C9662	NCJ41HK-335X-U	C CAPACITOR	3.3uF 50V K
C9701	NCJ41EK-106X-U	C CAPACITOR	10mF 25V K
C9702	QEHR0JM-228Z	E CAPACITOR	2200uF 6.3V M
C9703	NCB31HK-103X	C CAPACITOR	0.01uF 50V K
C9704	NCJ41CK-226X-U	C CAPACITOR	22mF 16V K
C9705	NCJ41CK-226X-U	C CAPACITOR	22mF 16V K
C9706	NDC31HJ-101X	C CAPACITOR	100pF 50V J
C9707	NCB31HK-103X	C CAPACITOR	0.01uF 50V K
C9708	NCB31HK-104X	C CAPACITOR	0.1uF 50V K
C9751	NCB31CK-184X	C CAPACITOR	0.18uF 16V K
C9752	NCB31HK-103X	C CAPACITOR	0.01uF 50V K
C9753	NCJ41EK-106X-U	C CAPACITOR	10mF 25V K
C9754	NCJ41CK-226X-U	C CAPACITOR	22mF 16V K
C9755	NCJ41CK-226X-U	C CAPACITOR	22mF 16V K
C9756	NDC31HJ-101X	C CAPACITOR	100pF 50V J
C9757	NCB31HK-103X	C CAPACITOR	0.01uF 50V K
C9758	QEHR0JM-228Z	E CAPACITOR	2200uF 6.3V M
C9801	NCJ41HK-335X-U	C CAPACITOR	3.3uF 50V K
C9802	NCJ41HK-335X-U	C CAPACITOR	3.3uF 50V K
C9803	NCB31HK-103X	C CAPACITOR	0.01uF 50V K
C9804	NCJ41CK-226X-U	C CAPACITOR	22mF 16V K
C9805	NCJ41CK-226X-U	C CAPACITOR	22mF 16V K
C9806	NCB31HK-104X	C CAPACITOR	0.1uF 50V K
C9808	NDC31HJ-101X	C CAPACITOR	100pF 50V J
C9809	NCB31HK-103X	C CAPACITOR	0.01uF 50V K
C9810	QEHR0JM-108Z	E CAPACITOR	1000uF 6.3V M
C9851	NEHM1EM-336X	E CAPACITOR	33uF 25V M
C9852	NEHM1EM-336X	E CAPACITOR	33uF 25V M
C9853	NEHM1EM-336X	E CAPACITOR	33uF 25V M
C9854	NEHM1EM-336X	E CAPACITOR	33uF 25V M
C9855	NCB21EK-334X	C CAPACITOR	0.33uF 25V K
C9856	NCB21EK-334X	C CAPACITOR	0.33uF 25V K
C9901	NEHM1EM-336X	E CAPACITOR	33uF 25V M
C9902	NEHM1EM-336X	E CAPACITOR	33uF 25V M
C9903	NCB11CK-475X	C CAPACITOR	4.7uF 16V K
C9904	NCB31EK-104X	C CAPACITOR	0.1uF 25V K
C9911	NBZ0017-106X	SP E CAPACITOR	10uF 25V M
C9972	NEHM0JM-107X	E CAPACITOR	100uF 6.3V M
R9602	NRSA02J-0R0X	MG RESISTOR	0Ω 1/10W J
R9603	NRSA63J-562X	MG RESISTOR	5.6kΩ 1/16W J
R9604	NRSA63D-563X	MG RESISTOR	56kΩ 1/16W D
R9605	NRSA63D-334X	MG RESISTOR	330kΩ 1/16W D
R9606	NRSA63D-103X	MG RESISTOR	10kΩ 1/16W D
R9607	NRSA63J-682X	MG RESISTOR	6.8kΩ 1/16W J
R9608	NRSA63J-182X	MG RESISTOR	1.8kΩ 1/16W J
R9609	NRSA63J-183X	MG RESISTOR	18kΩ 1/16W J
R9610	NRSA63J-223X	MG RESISTOR	22kΩ 1/16W J
R9611	NRSA02J-0R0X	MG RESISTOR	0Ω 1/10W J
R9651	NRSA02J-0R0X	MG RESISTOR	0Ω 1/10W J

⚠Ref No.	Part No.	Part Name	Description	Local
R9652	NRSA02J-0R0X	MG RESISTOR	0Ω 1/10W J	
R9653	NRSA63J-562X	MG RESISTOR	5.6kΩ 1/16W J	
R9654	NRSA63D-224X	MG RESISTOR	220kΩ 1/16W D	
R9655	NRSA63D-274X	MG RESISTOR	270kΩ 1/16W D	
R9656	NRSA63D-103X	MG RESISTOR	10kΩ 1/16W D	
R9657	NRSA63J-682X	MG RESISTOR	6.8kΩ 1/16W J	
R9658	NRSA63J-182X	MG RESISTOR	1.8kΩ 1/16W J	
R9659	NRSA63J-183X	MG RESISTOR	18kΩ 1/16W J	
R9669	NRSA63J-472X	MG RESISTOR	4.7kΩ 1/16W J	
R9670	NRSA63J-104X	MG RESISTOR	100kΩ 1/16W J	
R9671	NRSA02J-332X	MG RESISTOR	3.3kΩ 1/10W J	
R9687	NRSA02J-0R0X	MG RESISTOR	0Ω 1/10W J	
R9688	NRSA63J-0R0X	MG RESISTOR	0Ω 1/16W J	
R9690	NRSA02J-0R0X	MG RESISTOR	0Ω 1/10W J	
R9701	NRSA02J-181X	MG RESISTOR	180Ω 1/10W J	
R9703	NRSA02J-0R0X	MG RESISTOR	0Ω 1/10W J	
R9704	NRSA63J-332X	MG RESISTOR	3.3kΩ 1/16W J	
R9707	NRSA63D-273X	MG RESISTOR	27kΩ 1/16W D	
R9710	NRSA63D-103X	MG RESISTOR	10kΩ 1/16W D	
R9751	NRSA02J-0R0X	MG RESISTOR	0Ω 1/10W J	
R9752	NRSA63J-332X	MG RESISTOR	3.3kΩ 1/16W J	
R9753	NRSA63D-223X	MG RESISTOR	22kΩ 1/16W D	
R9754	NRSA63D-104X	MG RESISTOR	100kΩ 1/16W D	
R9755	NRSA63D-103X	MG RESISTOR	10kΩ 1/16W D	
R9756	NRSA02J-181X	MG RESISTOR	180Ω 1/10W J	
R9757	NRSA63J-333X	MG RESISTOR	33kΩ 1/16W J	
R9801	NRSA02J-0R0X	MG RESISTOR	0Ω 1/10W J	
R9802	NRSA63J-0R0X	MG RESISTOR	0Ω 1/16W J	
R9803	NRSA63J-332X	MG RESISTOR	3.3kΩ 1/16W J	
R9804	NRSA63D-563X	MG RESISTOR	56kΩ 1/16W D	
R9805	NRSA63D-274X	MG RESISTOR	270kΩ 1/16W D	
R9806	NRSA63D-103X	MG RESISTOR	10kΩ 1/16W D	
R9807	NRSA63J-682X	MG RESISTOR	6.8kΩ 1/16W J	
R9808	NRSA63J-182X	MG RESISTOR	1.8kΩ 1/16W J	
R9809	NRSA63J-183X	MG RESISTOR	18kΩ 1/16W J	
R9812	NRSA02J-0R0X	MG RESISTOR	0Ω 1/10W J	
R9814	NRSA02J-0R0X	MG RESISTOR	0Ω 1/10W J	
R9815	NRSA63J-333X	MG RESISTOR	33kΩ 1/16W J	
R9852	NRSA02J-0R0X	MG RESISTOR	0Ω 1/10W J	
R9901	NRSA02J-0R0X	MG RESISTOR	0Ω 1/10W J	
R9902	NRSA63J-0R0X	MG RESISTOR	0Ω 1/16W J	
R9903	NRSA02J-0R0X	MG RESISTOR	0Ω 1/10W J	
R9910	NRSA63D-183X	MG RESISTOR	18kΩ 1/16W D	
R9914	NRSA63D-681X	MG RESISTOR	680Ω 1/16W D	
R9915	NRSA63D-682X	MG RESISTOR	6.8kΩ 1/16W D	
R9918	NRS12BJ-221W	MG RESISTOR	220Ω 1/2W J	
R9924	NRSA63J-0R0X	MG RESISTOR	0Ω 1/16W J	
R9925	NRSA63J-473X	MG RESISTOR	47kΩ 1/16W J	
R9926	NRSA02J-222X	MG RESISTOR	2.2kΩ 1/10W J	
R9971	NRSA02J-0R0X	MG RESISTOR	0Ω 1/10W J	
R9973	NRSA02J-0R0X	MG RESISTOR	0Ω 1/10W J	
R9976	NRSA63J-562X	MG RESISTOR	5.6kΩ 1/16W J	
L9602	NQLC8CM-150X	COIL	15uH M	
L9651	NQR0562-003X	CHOKE COIL		
L9652	NQLC8CM-560X	COIL	56uH M	
L9701	NQLC8CM-150X	COIL	15uH M	
L9751	NQLC8CM-150X	COIL	15uH M	
L9802	NQLC8CM-150X	COIL	15uH M	
L9803	NQR0562-003X	CHOKE COIL		
L9972	NQR0562-003X	CHOKE COIL		

DIGITAL P.W. BOARD ASS'Y (SFL0D178A-M2)

⚠Ref No.	Part No.	Part Name	Description	Local
IC6001	JCC5068	IC		
IC6002	SN74LVC1G08V-X	IC		
IC6101	EDD1232AAFA-6B	IC		
IC6102	LP2996MR-X	IC		
IC6250	UPC5702GS-027-X	IC		
IC6251	R1170H331B-X	IC		
IC6502	THC63LVDM83R-W	IC		
IC6724	S-80928CLNB-G-W	IC		
IC6901	R1141Q331B-X	IC		
IC7033	CD74HC4094PW-X	IC		
IC7036	ADC081S021CIS-X	IC		
IC7201	39VF800A7IEKDB6	IC(MICRO C ROM)		
IC7203	M12L16161A-7TG	IC		
IC7204	S-80928CLNB-G-W	IC		
IC7601	M306V7MG-153FP	IC(MCU)		
IC7602	ATF16-32X667Z	IC(DIGITAL)	(SERVICE)	
IC7603	SN74AHCT1G08V-X	IC		
IC7604	SN74LVC1G04V-X	IC		
IC7605	MM1673XN-X	IC		
IC7606	MM1673XN-X	IC		
IC9001	MP2263DN-C053-X	IC		
IC9101	MM1662FT-X	IC		
IC9201	MP2263DN-C053-X	IC		
IC9301	MM1701CH-X	IC		
Q6201	2SA1530A/QR/-X	TRANSISTOR		
Q6202	2SA1530A/QR/-X	TRANSISTOR		
Q6203	2SA1022/BC/-X	TRANSISTOR		
Q6204	2SA1022/BC/-X	TRANSISTOR		
Q6205	2SA1022/BC/-X	TRANSISTOR		
Q6206	2SA1022/BC/-X	TRANSISTOR		
Q6207	2SC3837K/NP/-X	TRANSISTOR		
Q6208	2SC3837K/NP/-X	TRANSISTOR		
Q6209	2SC3837K/NP/-X	TRANSISTOR		
Q6210	2SC3837K/NP/-X	TRANSISTOR		
Q6211	2SC3837K/NP/-X	TRANSISTOR		
Q6212	2SC3837K/NP/-X	TRANSISTOR		
Q6213	2SC3837K/NP/-X	TRANSISTOR		
Q6214	2SC3837K/NP/-X	TRANSISTOR		
Q6250	2SC3928A/QR/-X	TRANSISTOR		
Q6251	2SC3928A/QR/-X	TRANSISTOR		
Q6501	2SC3928A/QR/-X	TRANSISTOR		
Q6502	2SC3928A/QR/-X	TRANSISTOR		
Q7032	RT1P441C-X	DIGI TRANSISTOR		
Q7033	RT1P441C-X	DIGI TRANSISTOR		
Q7034	RT1P441C-X	DIGI TRANSISTOR		
Q7501	RT1N441C-X	TRANSISTOR		
Q9501	RT1N441C-X	TRANSISTOR		
Q9502	2SC3928A/QR/-X	TRANSISTOR		
Q9503	2SC3928A/QR/-X	TRANSISTOR		
D6503	1SS355W-X	DIODE		
D7502	1SS355W-X	DIODE		
D9001	EC30HA03L-X	SB DIODE		
D9002	EC30HA03L-X	SB DIODE		
D9003	PTZ3.9B-X	Z DIODE		
D9201	EC30HA03L-X	SB DIODE		
D9202	EC30HA03L-X	SB DIODE		
D9203	PTZ3.9B-X	Z DIODE		
D9204	1SS355W-X	DIODE		
D9501	1SS355W-X	DIODE		
D9502	1SS355W-X	DIODE		
C6002	NCB31CK-104X	C CAPACITOR	0.1uF 16V K	
C6101	NCB30JK-225X	C CAPACITOR	2.2uF 6.3V K	
C6103	NCB31AK-474X	C CAPACITOR	0.47uF 10V K	
C6107	NCB31AK-474X	C CAPACITOR	0.47uF 10V K	
C6109	NCB31CK-104X	C CAPACITOR	0.1uF 16V K	
C6111	NCB31CK-104X	C CAPACITOR	0.1uF 16V K	
C6112	NCB31CK-104X	C CAPACITOR	0.1uF 16V K	
C6113	NCB31AK-474X	C CAPACITOR	0.47uF 10V K	
C6114	NCB31CK-104X	C CAPACITOR	0.1uF 16V K	
C6116	NCB31AK-474X	C CAPACITOR	0.47uF 10V K	
C6117	NCB30JK-225X	C CAPACITOR	2.2uF 6.3V K	
C6118	NCB31AK-474X	C CAPACITOR	0.47uF 10V K	
C6119	NCB31AK-474X	C CAPACITOR	0.47uF 10V K	
C6121	NCB31AK-474X	C CAPACITOR	0.47uF 10V K	
C6122	NEHL0JM-107X	E CAPACITOR	100uF 6.3V M	
C6123	NCB31CK-104X	C CAPACITOR	0.1uF 16V K	
C6124	NEHL0JM-107X	E CAPACITOR	100uF 6.3V M	
C6125	NCB31CK-104X	C CAPACITOR	0.1uF 16V K	
C6126	NCB30JK-225X	C CAPACITOR	2.2uF 6.3V K	
C6128	NCB30JK-225X	C CAPACITOR	2.2uF 6.3V K	
C6130	NCB30JK-225X	C CAPACITOR	2.2uF 6.3V K	
C6132	NEHL1EM-226X	E CAPACITOR	22uF 25V M	
C6133	NCB31CK-154X	C CAPACITOR	0.15uF 16V K	
C6134	NCB11AK-106X	C CAPACITOR	10uF 10V K	
C6135	NCB31CK-104X	C CAPACITOR	0.1uF 16V K	
C6139	NCB31CK-104X	C CAPACITOR	0.1uF 16V K	
C6205	NCB31CK-104X	C CAPACITOR	0.1uF 16V K	
C6211	NCB31CK-104X	C CAPACITOR	0.1uF 16V K	
C6217	NCB31CK-104X	C CAPACITOR	0.1uF 16V K	
C6218	NCB31CK-104X	C CAPACITOR	0.1uF 16V K	
C6219	NCB31CK-104X	C CAPACITOR	0.1uF 16V K	
C6220	NCB31CK-104X	C CAPACITOR	0.1uF 16V K	
C6227	NCB31CK-104X	C CAPACITOR	0.1uF 16V K	
C6228	NCB31CK-104X	C CAPACITOR	0.1uF 16V K	
C6229	NCB31CK-104X	C CAPACITOR	0.1uF 16V K	
C6236	NCB31CK-104X	C CAPACITOR	0.1uF 16V K	
C6237	NCB31CK-104X	C CAPACITOR	0.1uF 16V K	
C6238	NCB31CK-104X	C CAPACITOR	0.1uF 16V K	
C6239	NCB31CK-104X	C CAPACITOR	0.1uF 16V K	
C6240	NCB31CK-104X	C CAPACITOR	0.1uF 16V K	
C6241	NCB11AK-106X	C CAPACITOR	10uF 10V K	
C6242	NCB31AK-105X	C CAPACITOR	1uF 10V K	
C6243	NCB11AK-106X	C CAPACITOR	10uF 10V K	
C6244	NCB31AK-105X	C CAPACITOR	1uF 10V K	
C6245	NCB11AK-106X	C CAPACITOR	10uF 10V K	
C6246	NCB31AK-105X	C CAPACITOR	1uF 10V K	
C6247	NCB11AK-106X	C CAPACITOR	10uF 10V K	
C6248	NCB31AK-105X	C CAPACITOR	1uF 10V K	

⚠Ref No.	Part No.	Part Name	Description Local
C6249	NCB31AK-105X	C CAPACITOR	1uF 10V K
C6250	NCB11AK-106X	C CAPACITOR	10uF 10V K
C6251	NCB31CK-104X	C CAPACITOR	0.1uF 16V K
C6252	NCB11AK-106X	C CAPACITOR	10uF 10V K
C6253	NCB11AK-106X	C CAPACITOR	10uF 10V K
C6254	NCB11AK-106X	C CAPACITOR	10uF 10V K
C6255	NCB11AK-106X	C CAPACITOR	10uF 10V K
C6260	NCB21AK-225X	C CAPACITOR	2.2uF 10V K
C6261	NCB21AK-225X	C CAPACITOR	2.2uF 10V K
C6262	NCB21AK-225X	C CAPACITOR	2.2uF 10V K
C6263	NCB21AK-225X	C CAPACITOR	2.2uF 10V K
C6268	NCB31CK-104X	C CAPACITOR	0.1uF 16V K
C6270	NCB31CK-104X	C CAPACITOR	0.1uF 16V K
C6271	NCB31CK-104X	C CAPACITOR	0.1uF 16V K
C6272	NCB31CK-104X	C CAPACITOR	0.1uF 16V K
C6273	NCB31CK-104X	C CAPACITOR	0.1uF 16V K
C6274	NCB31CK-104X	C CAPACITOR	0.1uF 16V K
C6276	NCB31CK-104X	C CAPACITOR	0.1uF 16V K
C6277	NCB31CK-104X	C CAPACITOR	0.1uF 16V K
C6278	NCB31CK-104X	C CAPACITOR	0.1uF 16V K
C6279	NCB31CK-104X	C CAPACITOR	0.1uF 16V K
C6280	NCB31CK-104X	C CAPACITOR	0.1uF 16V K
C6282	NCB31CK-104X	C CAPACITOR	0.1uF 16V K
C6283	NCB31CK-104X	C CAPACITOR	0.1uF 16V K
C6284	NCB31CK-104X	C CAPACITOR	0.1uF 16V K
C6285	NCB31CK-104X	C CAPACITOR	0.1uF 16V K
C6286	NCB31CK-104X	C CAPACITOR	0.1uF 16V K
C6288	NCB31CK-104X	C CAPACITOR	0.1uF 16V K
C6289	NCB31CK-104X	C CAPACITOR	0.1uF 16V K
C6291	NCB31CK-104X	C CAPACITOR	0.1uF 16V K
C6293	NCB31CK-104X	C CAPACITOR	0.1uF 16V K
C6294	NBZ0007-107X	SP E CAPACITOR	100uF 4V M
C6295	NBZ0007-107X	SP E CAPACITOR	100uF 4V M
C6296	NCB11AK-106X	C CAPACITOR	10uF 10V K
C6297	NCB11AK-106X	C CAPACITOR	10uF 10V K
C6299	NCB31CK-104X	C CAPACITOR	0.1uF 16V K
C6300	NCB31CK-104X	C CAPACITOR	0.1uF 16V K
C6301	NCB31CK-104X	C CAPACITOR	0.1uF 16V K
C6520	NCB11AK-106X	C CAPACITOR	10uF 10V K
C6521	NCB31CK-104X	C CAPACITOR	0.1uF 16V K
C6522	NCB31CK-104X	C CAPACITOR	0.1uF 16V K
C6523	NCB31CK-104X	C CAPACITOR	0.1uF 16V K
C6524	NCB31CK-104X	C CAPACITOR	0.1uF 16V K
C6525	NCB31CK-104X	C CAPACITOR	0.1uF 16V K
C6531	NCB31CK-104X	C CAPACITOR	0.1uF 16V K
C6532	NCB31CK-104X	C CAPACITOR	0.1uF 16V K
C6533	NRSA63J-102X	MG RESISTOR	1kΩ 1/16W J
C6573	NCB21CK-105X	C CAPACITOR	1uF 16V K
C6602	NCB31CK-104X	C CAPACITOR	0.1uF 16V K
C6603	NCB31CK-104X	C CAPACITOR	0.1uF 16V K
C6610	NCF31CZ-104X	C CAPACITOR	0.1uF 16V Z
C6611	NCF31CZ-104X	C CAPACITOR	0.1uF 16V Z
C6612	NCF31CZ-104X	C CAPACITOR	0.1uF 16V Z
C6613	NCF31CZ-104X	C CAPACITOR	0.1uF 16V Z
C6614	NCF31CZ-104X	C CAPACITOR	0.1uF 16V Z
C6615	NCF31CZ-104X	C CAPACITOR	0.1uF 16V Z
C6616	NCF31CZ-104X	C CAPACITOR	0.1uF 16V Z
C6617	NCF31CZ-104X	C CAPACITOR	0.1uF 16V Z
C6618	NCF31CZ-104X	C CAPACITOR	0.1uF 16V Z
C6619	NCF31CZ-104X	C CAPACITOR	0.1uF 16V Z
C6620	NCF31CZ-104X	C CAPACITOR	0.1uF 16V Z
C6621	NCF31CZ-104X	C CAPACITOR	0.1uF 16V Z
C6622	NCF31CZ-104X	C CAPACITOR	0.1uF 16V Z
C6623	NCF31CZ-104X	C CAPACITOR	0.1uF 16V Z
C6624	NCF31CZ-104X	C CAPACITOR	0.1uF 16V Z
C6625	NCF31CZ-104X	C CAPACITOR	0.1uF 16V Z
C6626	NCF31CZ-104X	C CAPACITOR	0.1uF 16V Z
C6627	NCF31CZ-104X	C CAPACITOR	0.1uF 16V Z
C6628	NCF31CZ-104X	C CAPACITOR	0.1uF 16V Z
C6629	NCF31CZ-104X	C CAPACITOR	0.1uF 16V Z
C6630	NCF31CZ-104X	C CAPACITOR	0.1uF 16V Z
C6631	NCF31CZ-104X	C CAPACITOR	0.1uF 16V Z
C6632	NCF31CZ-104X	C CAPACITOR	0.1uF 16V Z
C6633	NCF31CZ-104X	C CAPACITOR	0.1uF 16V Z
C6634	NCF31CZ-104X	C CAPACITOR	0.1uF 16V Z
C6635	NCF31CZ-104X	C CAPACITOR	0.1uF 16V Z
C6636	NCF31CZ-104X	C CAPACITOR	0.1uF 16V Z
C6637	NCF31CZ-104X	C CAPACITOR	0.1uF 16V Z
C6638	NCF31CZ-104X	C CAPACITOR	0.1uF 16V Z
C6639	NCF31CZ-104X	C CAPACITOR	0.1uF 16V Z
C6640	NCF31CZ-104X	C CAPACITOR	0.1uF 16V Z
C6641	NCF31CZ-104X	C CAPACITOR	0.1uF 16V Z
C6642	NCF31CZ-104X	C CAPACITOR	0.1uF 16V Z
C6643	NCF31CZ-104X	C CAPACITOR	0.1uF 16V Z
C6644	NCF31CZ-104X	C CAPACITOR	0.1uF 16V Z
C6645	NCF31CZ-104X	C CAPACITOR	0.1uF 16V Z
C6656	NCF31CZ-104X	C CAPACITOR	0.1uF 16V Z
C6657	NCF31CZ-104X	C CAPACITOR	0.1uF 16V Z
C6658	NCF31CZ-104X	C CAPACITOR	0.1uF 16V Z
C6659	NCF31CZ-104X	C CAPACITOR	0.1uF 16V Z
C6660	NCF31CZ-104X	C CAPACITOR	0.1uF 16V Z
C6661	NCF31CZ-104X	C CAPACITOR	0.1uF 16V Z
C6677	NCF31CZ-104X	C CAPACITOR	0.1uF 16V Z
C6678	NCF31CZ-104X	C CAPACITOR	0.1uF 16V Z
C6679	NCF31CZ-104X	C CAPACITOR	0.1uF 16V Z
C6680	NCF31CZ-104X	C CAPACITOR	0.1uF 16V Z
C6681	NCF31CZ-104X	C CAPACITOR	0.1uF 16V Z
C6682	NCF31CZ-104X	C CAPACITOR	0.1uF 16V Z
C6683	NCF31CZ-104X	C CAPACITOR	0.1uF 16V Z
C6684	NCF31CZ-104X	C CAPACITOR	0.1uF 16V Z
C6685	NCF31CZ-104X	C CAPACITOR	0.1uF 16V Z
C6686	NCF31CZ-104X	C CAPACITOR	0.1uF 16V Z
C6687	NCF31CZ-104X	C CAPACITOR	0.1uF 16V Z
C6688	NCF31CZ-104X	C CAPACITOR	0.1uF 16V Z
C6689	NCF31CZ-104X	C CAPACITOR	0.1uF 16V Z
C6690	NCF31CZ-104X	C CAPACITOR	0.1uF 16V Z
C6691	NCF31CZ-104X	C CAPACITOR	0.1uF 16V Z
C6692	NCF31CZ-104X	C CAPACITOR	0.1uF 16V Z
C6693	NCF31CZ-104X	C CAPACITOR	0.1uF 16V Z
C6694	NCF31CZ-104X	C CAPACITOR	0.1uF 16V Z
C6695	NCF31CZ-104X	C CAPACITOR	0.1uF 16V Z
C6696	NCF31CZ-104X	C CAPACITOR	0.1uF 16V Z
C6697	NCF31CZ-104X	C CAPACITOR	0.1uF 16V Z
C6698	NCF31CZ-104X	C CAPACITOR	0.1uF 16V Z
C6699	NCF31CZ-104X	C CAPACITOR	0.1uF 16V Z
C6701	NCF11CZ-475X	C CAPACITOR	4.7uF 16V Z
C6723	NCB31HK-222X	C CAPACITOR	2200pF 50V K
C6724	NCB31HK-103X	C CAPACITOR	0.01uF 50V K
C6901	NBZ0007-107X	SP E CAPACITOR	100uF 4V M
C6902	NCB31CK-104X	C CAPACITOR	0.1uF 16V K
C6903	NCB31CK-104X	C CAPACITOR	0.1uF 16V K
C6904	NCB31CK-104X	C CAPACITOR	0.1uF 16V K
C6905	NCB31CK-104X	C CAPACITOR	0.1uF 16V K
C6906	NCB31CK-104X	C CAPACITOR	0.1uF 16V K
C6907	NCB31CK-104X	C CAPACITOR	0.1uF 16V K
C6908	NCB31CK-104X	C CAPACITOR	0.1uF 16V K
C6909	NCB31CK-104X	C CAPACITOR	0.1uF 16V K
C6910	NCB31CK-104X	C CAPACITOR	0.1uF 16V K
C6911	NCB31CK-104X	C CAPACITOR	0.1uF 16V K
C6912	NCB11AK-106X	C CAPACITOR	10uF 10V K
C6913	NCB31CK-104X	C CAPACITOR	0.1uF 16V K
C6914	NCB31CK-104X	C CAPACITOR	0.1uF 16V K
C6915	NCB31CK-104X	C CAPACITOR	0.1uF 16V K
C6916	NCB31CK-104X	C CAPACITOR	0.1uF 16V K
C6917	NCB31CK-104X	C CAPACITOR	0.1uF 16V K
C6918	NCB31CK-104X	C CAPACITOR	0.1uF 16V K
C6919	NCB31CK-104X	C CAPACITOR	0.1uF 16V K
C6921	NCB11AK-106X	C CAPACITOR	10uF 10V K
C6922	NCB31CK-104X	C CAPACITOR	0.1uF 16V K
C6923	NCB11AK-106X	C CAPACITOR	10uF 10V K
C6924	NCB31CK-104X	C CAPACITOR	0.1uF 16V K
C6925	NCB11AK-106X	C CAPACITOR	10uF 10V K
C6926	NCB31CK-104X	C CAPACITOR	0.1uF 16V K
C6927	NCB11AK-106X	C CAPACITOR	10uF 10V K
C6928	NCB31CK-104X	C CAPACITOR	0.1uF 16V K
C6929	NCB31AK-105X	C CAPACITOR	1uF 10V K
C7030	NCB31HK-103X	C CAPACITOR	0.01uF 50V K
C7031	NCB31HK-103X	C CAPACITOR	0.01uF 50V K
C7034	NCB31HK-153X	C CAPACITOR	0.015uF 50V K
C7039	NCB31HK-102X	C CAPACITOR	1000pF 50V K
C7040	NCB11AK-106X	C CAPACITOR	10uF 10V K
C7044	NCB31CK-104X	C CAPACITOR	0.1uF 16V K
C7051	NCB31CK-104X	C CAPACITOR	0.1uF 16V K
C7052	NCB31CK-104X	C CAPACITOR	0.1uF 16V K
C7053	NCB31CK-104X	C CAPACITOR	0.1uF 16V K
C7054	NCB31CK-104X	C CAPACITOR	0.1uF 16V K
C7055	NCB31CK-104X	C CAPACITOR	0.1uF 16V K
C7056	NCB31CK-104X	C CAPACITOR	0.1uF 16V K
C7057	NCB31CK-104X	C CAPACITOR	0.1uF 16V K
C7058	NCB31CK-104X	C CAPACITOR	0.1uF 16V K
C7059	NCB31CK-104X	C CAPACITOR	0.1uF 16V K
C7060	NCB31CK-104X	C CAPACITOR	0.1uF 16V K
C7061	NCB31CK-104X	C CAPACITOR	0.1uF 16V K
C7062	NCB31CK-104X	C CAPACITOR	0.1uF 16V K
C7063	NCB31CK-104X	C CAPACITOR	0.1uF 16V K
C7064	NCB31CK-104X	C CAPACITOR	0.1uF 16V K
C7065	NCB31CK-104X	C CAPACITOR	0.1uF 16V K
C7066	NCB31CK-104X	C CAPACITOR	0.1uF 16V K
C7067	NCB31CK-104X	C CAPACITOR	0.1uF 16V K
C7068	NCB31CK-104X	C CAPACITOR	0.1uF 16V K
C7073	NCB31CK-104X	C CAPACITOR	0.1uF 16V K
C7202	NCB31CK-104X	C CAPACITOR	0.1uF 16V K
C7203	NCB31CK-104X	C CAPACITOR	0.1uF 16V K
C7204	NCB31CK-104X	C CAPACITOR	0.1uF 16V K
C7205	NCB31CK-104X	C CAPACITOR	0.1uF 16V K
C7206	NCB31CK-104X	C CAPACITOR	0.1uF 16V K
C7207	NCB31CK-104X	C CAPACITOR	0.1uF 16V K
C7208	NCB31CK-104X	C CAPACITOR	0.1uF 16V K
C7209	NCB31CK-104X	C CAPACITOR	0.1uF 16V K
C7211	NCB31HK-102X	C CAPACITOR	1000pF 50V K

⚠Ref No.	Part No.	Part Name	Description	Local
C7215	NDC31HJ-330X	C CAPACITOR	33pF 50V J	
C7501	NCF31CZ-104X	C CAPACITOR	0.1uF 16V Z	
C7506	NCB31HK-103X	C CAPACITOR	0.01uF 50V K	
C7507	NCB31HK-103X	C CAPACITOR	0.01uF 50V K	
C7508	NCB31CK-104X	C CAPACITOR	0.1uF 16V K	
C7510	NCB31HK-103X	C CAPACITOR	0.01uF 50V K	
C7514	NCB31HK-103X	C CAPACITOR	0.01uF 50V K	
C7515	NCB31HK-103X	C CAPACITOR	0.01uF 50V K	
C7517	NCB31HK-103X	C CAPACITOR	0.01uF 50V K	
C7601	NCB11CK-105X	C CAPACITOR	1uF 16V K	
C7602	NCB31CK-104X	C CAPACITOR	0.1uF 16V K	
C7603	NCB31CK-104X	C CAPACITOR	0.1uF 16V K	
C7604	NCB31HK-102X	C CAPACITOR	1000pF 50V K	
C7605	NCB31HK-221X	C CAPACITOR	220pF 50V K	
C7606	NCB21AK-225X	C CAPACITOR	2.2uF 10V K	
C7607	NCB31HK-681X	C CAPACITOR	680pF 50V K	
C7608	NCB31CK-104X	C CAPACITOR	0.1uF 16V K	
C7609	NCB31HK-681X	C CAPACITOR	680pF 50V K	
C7610	NDC31HJ-102X	C CAPACITOR	1000pF 50V J	
C7611	NDC31HJ-221X	C CAPACITOR	220pF 50V J	
C7612	NCB21AK-225X	C CAPACITOR	2.2uF 10V K	
C7615	NCB31CK-104X	C CAPACITOR	0.1uF 16V K	
C7616	NCB31CK-104X	C CAPACITOR	0.1uF 16V K	
C7617	NCB31CK-104X	C CAPACITOR	0.1uF 16V K	
C7618	NCF11CZ-475X	C CAPACITOR	4.7uF 16V Z	
C7619	NCB11AK-106X	C CAPACITOR	10uF 10V K	
C7620	NCF11CZ-475X	C CAPACITOR	4.7uF 16V Z	
C7621	NCB11AK-106X	C CAPACITOR	10uF 10V K	
C7631	NCB31AK-224X	C CAPACITOR	0.22uF 10V K	
C7632	NCB31AK-224X	C CAPACITOR	0.22uF 10V K	
C7633	NDC31HJ-151X	C CAPACITOR	150pF 50V J	
C9001	NDC31HJ-102X	C CAPACITOR	1000pF 50V J	
C9002	NCJ41EK-106X-U	C CAPACITOR	10mF 25V K	
C9003	NCB31EK-104X	C CAPACITOR	0.1uF 25V K	
C9004	NCB31HK-103X	C CAPACITOR	0.01uF 50V K	
C9005	NCJ41CK-226X-U	C CAPACITOR	22mF 16V K	
C9006	NDC31HJ-120X	C CAPACITOR	12pF 50V J	
C9007	NCB31HK-103X	C CAPACITOR	0.01uF 50V K	
C9010	NCJ41CK-226X-U	C CAPACITOR	22mF 16V K	
C9101	NCB11CK-475X	C CAPACITOR	4.7uF 16V K	
C9103	NCB11CK-225X	C CAPACITOR	2.2uF 16V K	
C9201	NDC31HJ-102X	C CAPACITOR	1000pF 50V J	
C9202	NCJ41EK-106X-U	C CAPACITOR	10mF 25V K	
C9204	NCB31HK-103X	C CAPACITOR	0.01uF 50V K	
C9205	NCJ41CK-226X-U	C CAPACITOR	22mF 16V K	
C9206	NDC31HJ-120X	C CAPACITOR	12pF 50V J	
C9207	NCB31HK-153X	C CAPACITOR	0.015uF 50V K	
C9208	NCJ41CK-226X-U	C CAPACITOR	22mF 16V K	
C9209	NCB31HK-102X	C CAPACITOR	1000pF 50V K	
C9211	NCB31HK-473X	C CAPACITOR	0.047uF 50V K	
C9302	NCB11CK-475X	C CAPACITOR	4.7uF 16V K	
C9303	NCB31HK-103X	C CAPACITOR	0.01uF 50V K	
C9304	NCB11CK-475X	C CAPACITOR	4.7uF 16V K	
C9501	NCB31CK-105X	C CAPACITOR	1uF 16V K	
C9502	NCB31CK-105X	C CAPACITOR	1uF 16V K	
R6002	NRSA63J-0R0X	MG RESISTOR	0Ω 1/16W J	
R6003	NRSA63J-0R0X	MG RESISTOR	0Ω 1/16W J	
R6006	NRSA63J-0R0X	MG RESISTOR	0Ω 1/16W J	
R6008	NRSA63J-0R0X	MG RESISTOR	0Ω 1/16W J	
R6009	NRSA63J-220X	MG RESISTOR	22Ω 1/16W J	
R6014	NRSA63J-0R0X	MG RESISTOR	0Ω 1/16W J	
R6017	NRSA63J-0R0X	MG RESISTOR	0Ω 1/16W J	
R6018	NRSA63J-0R0X	MG RESISTOR	0Ω 1/16W J	
R6019	NRSA63J-0R0X	MG RESISTOR	0Ω 1/16W J	
R6020	NRSA63J-0R0X	MG RESISTOR	0Ω 1/16W J	
R6073	NRSA63J-0R0X	MG RESISTOR	0Ω 1/16W J	
R6074	NRSA63J-0R0X	MG RESISTOR	0Ω 1/16W J	
R6075	NRSA63J-0R0X	MG RESISTOR	0Ω 1/16W J	
R6080	NRSA63J-0R0X	MG RESISTOR	0Ω 1/16W J	
R6101	NRSA63J-220X	MG RESISTOR	22Ω 1/16W J	
R6102	NRSA63J-220X	MG RESISTOR	22Ω 1/16W J	
R6103	NRSA63J-220X	MG RESISTOR	22Ω 1/16W J	
R6104	NRSA63J-220X	MG RESISTOR	22Ω 1/16W J	
R6105	NRSA63J-220X	MG RESISTOR	22Ω 1/16W J	
R6106	NRSA63J-220X	MG RESISTOR	22Ω 1/16W J	
R6107	NRSA63J-100X	MG RESISTOR	10Ω 1/16W J	
R6108	NRSA63J-100X	MG RESISTOR	10Ω 1/16W J	
R6109	NRSA63J-220X	MG RESISTOR	22Ω 1/16W J	
R6110	NRSA63J-220X	MG RESISTOR	22Ω 1/16W J	
R6111	NRSA63J-220X	MG RESISTOR	22Ω 1/16W J	
R6112	NRSA63J-470X	MG RESISTOR	47Ω 1/16W J	
R6113	NRSA63J-470X	MG RESISTOR	47Ω 1/16W J	
R6114	NRSA63J-470X	MG RESISTOR	47Ω 1/16W J	
R6115	NRSA63J-470X	MG RESISTOR	47Ω 1/16W J	
R6116	NRSA63J-470X	MG RESISTOR	47Ω 1/16W J	
R6117	NRSA63J-470X	MG RESISTOR	47Ω 1/16W J	
R6118	NRSA63J-470X	MG RESISTOR	47Ω 1/16W J	
R6119	NRSA63J-470X	MG RESISTOR	47Ω 1/16W J	
R6120	NRSA63J-470X	MG RESISTOR	47Ω 1/16W J	

⚠Ref No.	Part No.	Part Name	Description	Local
R6121	NRSA63J-470X	MG RESISTOR	47Ω 1/16W J	
R6122	NRSA63J-470X	MG RESISTOR	47Ω 1/16W J	
R6127	NRSA63J-1R5X	MG RESISTOR	1.5Ω 1/16W J	
R6141	NRSA63J-0R0X	MG RESISTOR	0Ω 1/16W J	
R6142	NRSA63J-0R0X	MG RESISTOR	0Ω 1/16W J	
R6201	NRSA63J-0R0X	MG RESISTOR	0Ω 1/16W J	
R6202	NRSA63J-0R0X	MG RESISTOR	0Ω 1/16W J	
R6203	NRSA63J-0R0X	MG RESISTOR	0Ω 1/16W J	
R6204	NRSA63J-0R0X	MG RESISTOR	0Ω 1/16W J	
R6205	NRSA63J-332X	MG RESISTOR	3.3kΩ 1/16W J	
R6207	NRSA63J-0R0X	MG RESISTOR	0Ω 1/16W J	
R6209	NRSA63J-0R0X	MG RESISTOR	0Ω 1/16W J	
R6214	NRSA63J-0R0X	MG RESISTOR	0Ω 1/16W J	
R6215	NRSA63J-0R0X	MG RESISTOR	0Ω 1/16W J	
R6216	NRSA63J-0R0X	MG RESISTOR	0Ω 1/16W J	
R6217	NRSA63J-0R0X	MG RESISTOR	0Ω 1/16W J	
R6220	NRSA63J-682X	MG RESISTOR	6.8kΩ 1/16W J	
R6227	NRSA63J-391X	MG RESISTOR	390Ω 1/16W J	
R6228	NRSA63J-332X	MG RESISTOR	3.3kΩ 1/16W J	
R6229	NRSA63J-682X	MG RESISTOR	6.8kΩ 1/16W J	
R6230	NRSA63J-0R0X	MG RESISTOR	0Ω 1/16W J	
R6231	NRSA63J-0R0X	MG RESISTOR	0Ω 1/16W J	
R6232	NRSA63J-0R0X	MG RESISTOR	0Ω 1/16W J	
R6233	NRSA63J-0R0X	MG RESISTOR	0Ω 1/16W J	
R6234	NRSA63J-391X	MG RESISTOR	390Ω 1/16W J	
R6235	NRSA63J-101X	MG RESISTOR	100Ω 1/16W J	
R6236	NRSA63J-331X	MG RESISTOR	330Ω 1/16W J	
R6237	NRSA63J-332X	MG RESISTOR	3.3kΩ 1/16W J	
R6238	NRSA63J-101X	MG RESISTOR	100Ω 1/16W J	
R6239	NRSA63J-331X	MG RESISTOR	330Ω 1/16W J	
R6240	NRSA63J-682X	MG RESISTOR	6.8kΩ 1/16W J	
R6241	NRSA63J-101X	MG RESISTOR	100Ω 1/16W J	
R6242	NRSA63J-331X	MG RESISTOR	330Ω 1/16W J	
R6243	NRSA63J-102X	MG RESISTOR	1kΩ 1/16W J	
R6244	NRSA63J-101X	MG RESISTOR	100Ω 1/16W J	
R6245	NRSA63J-331X	MG RESISTOR	330Ω 1/16W J	
R6246	NRSA63J-332X	MG RESISTOR	3.3kΩ 1/16W J	
R6247	NRSA63J-682X	MG RESISTOR	6.8kΩ 1/16W J	
R6248	NRSA63J-473X	MG RESISTOR	47kΩ 1/16W J	
R6249	NRSA63J-333X	MG RESISTOR	33kΩ 1/16W J	
R6251	NRSA63J-0R0X	MG RESISTOR	0Ω 1/16W J	
R6252	NRSA63J-0R0X	MG RESISTOR	0Ω 1/16W J	
R6253	NRSA63J-222X	MG RESISTOR	2.2kΩ 1/16W J	
R6254	NRSA63J-151X	MG RESISTOR	150Ω 1/16W J	
R6255	NRSA63J-472X	MG RESISTOR	4.7kΩ 1/16W J	
R6256	NRSA63J-0R0X	MG RESISTOR	0Ω 1/16W J	
R6257	NRSA63J-222X	MG RESISTOR	2.2kΩ 1/16W J	
R6258	NRSA63J-151X	MG RESISTOR	150Ω 1/16W J	
R6259	NRSA63J-472X	MG RESISTOR	4.7kΩ 1/16W J	
R6260	NRSA63J-0R0X	MG RESISTOR	0Ω 1/16W J	
R6261	NRSA63J-222X	MG RESISTOR	2.2kΩ 1/16W J	
R6262	NRSA63J-151X	MG RESISTOR	150Ω 1/16W J	
R6263	NRSA63J-472X	MG RESISTOR	4.7kΩ 1/16W J	
R6264	NRSA63J-0R0X	MG RESISTOR	0Ω 1/16W J	
R6265	NRSA63J-103X	MG RESISTOR	10kΩ 1/16W J	
R6266	NRSA63J-221X	MG RESISTOR	220Ω 1/16W J	
R6267	NRSA63J-472X	MG RESISTOR	4.7kΩ 1/16W J	
R6268	NRSA63D-242X	MG RESISTOR	2.4kΩ 1/16W D	
R6269	NRSA63D-242X	MG RESISTOR	2.4kΩ 1/16W D	
R6270	NRSA63D-242X	MG RESISTOR	2.4kΩ 1/16W D	
R6271	NRSA63D-242X	MG RESISTOR	2.4kΩ 1/16W D	
R6273	NRSA63J-0R0X	MG RESISTOR	0Ω 1/16W J	
R6274	NRSA63J-220X	MG RESISTOR	22Ω 1/16W J	
R6275	NRSA63J-0R0X	MG RESISTOR	0Ω 1/16W J	
R6276	NRSA63J-0R0X	MG RESISTOR	0Ω 1/16W J	
R6277	NRSA63J-391X	MG RESISTOR	390Ω 1/16W J	
R6279	NRSA63J-0R0X	MG RESISTOR	0Ω 1/16W J	
R6280	NRSA63J-331X	MG RESISTOR	330Ω 1/16W J	
R6281	NRSA63J-101X	MG RESISTOR	100Ω 1/16W J	
R6282	NRSA63J-331X	MG RESISTOR	330Ω 1/16W J	
R6283	NRSA63J-101X	MG RESISTOR	100Ω 1/16W J	
R6284	NRSA63J-0R0X	MG RESISTOR	0Ω 1/16W J	
R6285	NRSA63J-0R0X	MG RESISTOR	0Ω 1/16W J	
R6286	NRSA63J-391X	MG RESISTOR	390Ω 1/16W J	
R6287	NRSA63J-391X	MG RESISTOR	390Ω 1/16W J	
R6288	NRSA63J-391X	MG RESISTOR	390Ω 1/16W J	
R6289	NRSA63J-102X	MG RESISTOR	1kΩ 1/16W J	
R6290	NRSA63J-0R0X	MG RESISTOR	0Ω 1/16W J	
R6291	NRSA63J-473X	MG RESISTOR	47kΩ 1/16W J	
R6292	NRSA63J-473X	MG RESISTOR	47kΩ 1/16W J	
R6297	NRSA63J-0R0X	MG RESISTOR	0Ω 1/16W J	
R6298	NRSA63J-0R0X	MG RESISTOR	0Ω 1/16W J	
R6300	NRSA63J-0R0X	MG RESISTOR	0Ω 1/16W J	
R6302	NRSA63J-0R0X	MG RESISTOR	0Ω 1/16W J	
R6305	NRSA63J-0R0X	MG RESISTOR	0Ω 1/16W J	
R6332	NRSA63J-0R0X	MG RESISTOR	0Ω 1/16W J	
R6333	NRSA63J-0R0X	MG RESISTOR	0Ω 1/16W J	
R6338	NRSA63J-0R0X	MG RESISTOR	0Ω 1/16W J	
R6339	NRSA63J-0R0X	MG RESISTOR	0Ω 1/16W J	
R6503	NRSA63J-0R0X	MG RESISTOR	0Ω 1/16W J	

⚠Ref No.	Part No.	Part Name	Description Local
R6521	NRSA63J-101X	MG RESISTOR	100Ω 1/16W J
R6522	NRSA63J-101X	MG RESISTOR	100Ω 1/16W J
R6523	NRSA63J-102X	MG RESISTOR	1kΩ 1/16W J
R6524	NRSA63J-102X	MG RESISTOR	1kΩ 1/16W J
R6525	NRSA63J-0R0X	MG RESISTOR	0Ω 1/16W J
R6529	NRSA63J-0R0X	MG RESISTOR	0Ω 1/16W J
R6532	NRSA63J-102X	MG RESISTOR	1kΩ 1/16W J
R6533	NRSA63J-0R0X	MG RESISTOR	0Ω 1/16W J
R6534	NRSA63J-0R0X	MG RESISTOR	0Ω 1/16W J
R6535	NRSA63J-102X	MG RESISTOR	1kΩ 1/16W J
R6537	NRSA63J-0R0X	MG RESISTOR	0Ω 1/16W J
R6538	NRSA63J-103X	MG RESISTOR	10kΩ 1/16W J
R6539	NRSA63J-473X	MG RESISTOR	47kΩ 1/16W J
R6541	NRSA63J-102X	MG RESISTOR	1kΩ 1/16W J
R6547	NRSA63J-102X	MG RESISTOR	1kΩ 1/16W J
R6548	NRSA63J-103X	MG RESISTOR	10kΩ 1/16W J
R6549	NRSA63J-103X	MG RESISTOR	10kΩ 1/16W J
R6569	NRSA63J-0R0X	MG RESISTOR	0Ω 1/16W J
R6575	NRSA63J-0R0X	MG RESISTOR	0Ω 1/16W J
R6576	NRSA63J-0R0X	MG RESISTOR	0Ω 1/16W J
R6595	NRSA63J-473X	MG RESISTOR	47kΩ 1/16W J
R6596	NRSA63J-153X	MG RESISTOR	15kΩ 1/16W J
R6599	NRSA63J-823X	MG RESISTOR	82kΩ 1/16W J
R6607	NRSA63J-101X	MG RESISTOR	100Ω 1/16W J
R6609	NRSA63J-101X	MG RESISTOR	100Ω 1/16W J
R6611	NRSA63J-102X	MG RESISTOR	1kΩ 1/16W J
R6707	NRSA63J-0R0X	MG RESISTOR	0Ω 1/16W J
R6712	NRSA63J-0R0X	MG RESISTOR	0Ω 1/16W J
R6713	NRSA63J-0R0X	MG RESISTOR	0Ω 1/16W J
R6730	NRSA63J-0R0X	MG RESISTOR	0Ω 1/16W J
R6731	NRSA63J-0R0X	MG RESISTOR	0Ω 1/16W J
R6732	NRSA63J-0R0X	MG RESISTOR	0Ω 1/16W J
R6921	NRSA63J-0R0X	MG RESISTOR	0Ω 1/16W J
R6922	NRSA63J-0R0X	MG RESISTOR	0Ω 1/16W J
R6923	NRSA63J-0R0X	MG RESISTOR	0Ω 1/16W J
R6924	NRSA63J-0R0X	MG RESISTOR	0Ω 1/16W J
R7031	NRSA63J-0R0X	MG RESISTOR	0Ω 1/16W J
R7032	NRSA63J-151X	MG RESISTOR	150Ω 1/16W J
R7033	NRSA63J-0R0X	MG RESISTOR	0Ω 1/16W J
R7034	NRSA63J-0R0X	MG RESISTOR	0Ω 1/16W J
R7036	NRSA63J-0R0X	MG RESISTOR	0Ω 1/16W J
R7039	NRSA63J-102X	MG RESISTOR	1kΩ 1/16W J
R7041	NRSA63J-223X	MG RESISTOR	22kΩ 1/16W J
R7042	NRSA63J-333X	MG RESISTOR	33kΩ 1/16W J
R7044	NRSA63J-0R0X	MG RESISTOR	0Ω 1/16W J
R7047	NRSA63J-0R0X	MG RESISTOR	0Ω 1/16W J
R7049	NRSA63J-0R0X	MG RESISTOR	0Ω 1/16W J
R7051	NRSA63J-0R0X	MG RESISTOR	0Ω 1/16W J
R7052	NRSA63J-0R0X	MG RESISTOR	0Ω 1/16W J
R7054	NRSA63J-0R0X	MG RESISTOR	0Ω 1/16W J
R7055	NRSA63J-0R0X	MG RESISTOR	0Ω 1/16W J
R7056	NRSA63J-0R0X	MG RESISTOR	0Ω 1/16W J
R7057	NRSA63J-0R0X	MG RESISTOR	0Ω 1/16W J
R7058	NRSA63J-0R0X	MG RESISTOR	0Ω 1/16W J
R7059	NRSA63J-0R0X	MG RESISTOR	0Ω 1/16W J
R7060	NRSA63J-154X	MG RESISTOR	150kΩ 1/16W J
R7061	NRSA63J-0R0X	MG RESISTOR	0Ω 1/16W J
R7062	NRSA63J-0R0X	MG RESISTOR	0Ω 1/16W J
R7063	NRSA63J-0R0X	MG RESISTOR	0Ω 1/16W J
R7064	NRSA63J-103X	MG RESISTOR	10kΩ 1/16W J
R7065	NRSA63J-103X	MG RESISTOR	10kΩ 1/16W J
R7066	NRSA63J-562X	MG RESISTOR	5.6kΩ 1/16W J
R7067	NRSA63J-562X	MG RESISTOR	5.6kΩ 1/16W J
R7068	NRSA63J-0R0X	MG RESISTOR	0Ω 1/16W J
R7069	NRSA63J-0R0X	MG RESISTOR	0Ω 1/16W J
R7072	NRSA63J-0R0X	MG RESISTOR	0Ω 1/16W J
R7077	NRSA63J-102X	MG RESISTOR	1kΩ 1/16W J
R7078	NRSA63J-0R0X	MG RESISTOR	0Ω 1/16W J
R7081	NRSA63J-473X	MG RESISTOR	47kΩ 1/16W J
R7084	NRSA63J-221X	MG RESISTOR	220Ω 1/16W J
R7085	NRSA63J-221X	MG RESISTOR	220Ω 1/16W J
R7086	NRSA63J-0R0X	MG RESISTOR	0Ω 1/16W J
R7087	NRSA63J-0R0X	MG RESISTOR	0Ω 1/16W J
R7088	NRSA63J-0R0X	MG RESISTOR	0Ω 1/16W J
R7089	NRSA63J-102X	MG RESISTOR	1kΩ 1/16W J
R7091	NRSA63J-0R0X	MG RESISTOR	0Ω 1/16W J
R7092	NRSA63J-101X	MG RESISTOR	100Ω 1/16W J
R7093	NRSA63J-101X	MG RESISTOR	100Ω 1/16W J
R7094	NRSA63J-101X	MG RESISTOR	100Ω 1/16W J
R7095	NRSA63J-0R0X	MG RESISTOR	0Ω 1/16W J
R7097	NRSA63J-0R0X	MG RESISTOR	0Ω 1/16W J
R7098	NRSA63J-0R0X	MG RESISTOR	0Ω 1/16W J
R7099	NRSA63J-0R0X	MG RESISTOR	0Ω 1/16W J
R7100	NRSA63J-0R0X	MG RESISTOR	0Ω 1/16W J
R7103	NRSA63J-0R0X	MG RESISTOR	0Ω 1/16W J
R7106	NRSA63J-0R0X	MG RESISTOR	0Ω 1/16W J
R7109	NRSA63J-0R0X	MG RESISTOR	0Ω 1/16W J
R7112	NRSA63J-0R0X	MG RESISTOR	0Ω 1/16W J
R7113	NRSA63J-0R0X	MG RESISTOR	0Ω 1/16W J
R7123	NRSA63J-0R0X	MG RESISTOR	0Ω 1/16W J

⚠Ref No.	Part No.	Part Name	Description Local
R7124	NRSA63J-0R0X	MG RESISTOR	0Ω 1/16W J
R7125	NRSA63J-0R0X	MG RESISTOR	0Ω 1/16W J
R7127	NRSA63J-0R0X	MG RESISTOR	0Ω 1/16W J
R7157	NRSA63J-0R0X	MG RESISTOR	0Ω 1/16W J
R7170	NRSA63J-0R0X	MG RESISTOR	0Ω 1/16W J
R7171	NRSA63J-0R0X	MG RESISTOR	0Ω 1/16W J
R7172	NRSA63J-0R0X	MG RESISTOR	0Ω 1/16W J
R7173	NRSA63J-0R0X	MG RESISTOR	0Ω 1/16W J
R7174	NRSA63J-473X	MG RESISTOR	47kΩ 1/16W J
R7175	NRSA63J-0R0X	MG RESISTOR	0Ω 1/16W J
R7176	NRSA63J-0R0X	MG RESISTOR	0Ω 1/16W J
R7177	NRSA63J-0R0X	MG RESISTOR	0Ω 1/16W J
R7178	NRSA63J-0R0X	MG RESISTOR	0Ω 1/16W J
R7179	NRSA63J-0R0X	MG RESISTOR	0Ω 1/16W J
R7184	NRSA63J-0R0X	MG RESISTOR	0Ω 1/16W J
R7187	NRSA63J-0R0X	MG RESISTOR	0Ω 1/16W J
R7192	NRSA63J-0R0X	MG RESISTOR	0Ω 1/16W J
R7201	NRSA63J-473X	MG RESISTOR	47kΩ 1/16W J
R7202	NRSA63J-473X	MG RESISTOR	47kΩ 1/16W J
R7203	NRSA63J-473X	MG RESISTOR	47kΩ 1/16W J
R7207	NRSA63J-101X	MG RESISTOR	100Ω 1/16W J
R7208	NRSA63J-0R0X	MG RESISTOR	0Ω 1/16W J
R7211	NRSA63J-0R0X	MG RESISTOR	0Ω 1/16W J
R7214	NRSA63J-0R0X	MG RESISTOR	0Ω 1/16W J
R7215	NRSA63J-473X	MG RESISTOR	47kΩ 1/16W J
R7216	NRSA63J-473X	MG RESISTOR	47kΩ 1/16W J
R7217	NRSA63J-473X	MG RESISTOR	47kΩ 1/16W J
R7221	NRSA63J-0R0X	MG RESISTOR	0Ω 1/16W J
R7223	NRSA63J-473X	MG RESISTOR	47kΩ 1/16W J
R7224	NRSA63J-473X	MG RESISTOR	47kΩ 1/16W J
R7225	NRSA63J-473X	MG RESISTOR	47kΩ 1/16W J
R7238	NRSA63J-0R0X	MG RESISTOR	0Ω 1/16W J
R7243	NRSA63J-0R0X	MG RESISTOR	0Ω 1/16W J
R7349	NRSA63J-103X	MG RESISTOR	10kΩ 1/16W J
R7350	NRSA63J-103X	MG RESISTOR	10kΩ 1/16W J
R7351	NRSA63J-103X	MG RESISTOR	10kΩ 1/16W J
R7370	NRSA63J-0R0X	MG RESISTOR	0Ω 1/16W J
R7501	NRSA63J-0R0X	MG RESISTOR	0Ω 1/16W J
R7502	NRSA63J-0R0X	MG RESISTOR	0Ω 1/16W J
R7504	NRSA63J-104X	MG RESISTOR	100kΩ 1/16W J
R7505	NRSA63J-103X	MG RESISTOR	10kΩ 1/16W J
R7512	NRSA63J-0R0X	MG RESISTOR	0Ω 1/16W J
R7513	NRSA63J-0R0X	MG RESISTOR	0Ω 1/16W J
R7514	NRSA63J-0R0X	MG RESISTOR	0Ω 1/16W J
R7515	NRSA63J-102X	MG RESISTOR	1kΩ 1/16W J
R7601	NRSA63J-103X	MG RESISTOR	10kΩ 1/16W J
R7602	NRSA63J-103X	MG RESISTOR	10kΩ 1/16W J
R7603	NRSA63J-0R0X	MG RESISTOR	0Ω 1/16W J
R7604	NRSA63J-0R0X	MG RESISTOR	0Ω 1/16W J
R7605	NRSA63J-471X	MG RESISTOR	470Ω 1/16W J
R7606	NRSA63J-105X	MG RESISTOR	1MΩ 1/16W J
R7607	NRSA63J-682X	MG RESISTOR	6.8kΩ 1/16W J
R7608	NRSA63J-105X	MG RESISTOR	1MΩ 1/16W J
R7611	NRSA63J-102X	MG RESISTOR	1kΩ 1/16W J
R7612	NRSA63J-471X	MG RESISTOR	470Ω 1/16W J
R7613	NRSA63J-102X	MG RESISTOR	1kΩ 1/16W J
R7614	NRSA63J-0R0X	MG RESISTOR	0Ω 1/16W J
R7615	NRSA63J-0R0X	MG RESISTOR	0Ω 1/16W J
R7616	NRSA63J-0R0X	MG RESISTOR	0Ω 1/16W J
R7618	NRSA63J-0R0X	MG RESISTOR	0Ω 1/16W J
R7619	NRSA63J-0R0X	MG RESISTOR	0Ω 1/16W J
R7620	NRSA63J-102X	MG RESISTOR	1kΩ 1/16W J
R7622	NRSA63J-0R0X	MG RESISTOR	0Ω 1/16W J
R7623	NRSA63J-0R0X	MG RESISTOR	0Ω 1/16W J
R7624	NRSA63J-0R0X	MG RESISTOR	0Ω 1/16W J
R7625	NRSA63J-0R0X	MG RESISTOR	0Ω 1/16W J
R7626	NRSA63J-0R0X	MG RESISTOR	0Ω 1/16W J
R7627	NRSA63J-0R0X	MG RESISTOR	0Ω 1/16W J
R7628	NRSA63J-333X	MG RESISTOR	33kΩ 1/16W J
R7631	NRSA63J-102X	MG RESISTOR	1kΩ 1/16W J
R7632	NRSA63J-222X	MG RESISTOR	2.2kΩ 1/16W J
R7634	NRSA63J-102X	MG RESISTOR	1kΩ 1/16W J
R7635	NRSA63J-222X	MG RESISTOR	2.2kΩ 1/16W J
R7643	NRSA63J-0R0X	MG RESISTOR	0Ω 1/16W J
R7644	NRSA63J-0R0X	MG RESISTOR	0Ω 1/16W J
R7646	NRSA63J-0R0X	MG RESISTOR	0Ω 1/16W J
R7649	NRSA63J-103X	MG RESISTOR	10kΩ 1/16W J
R7658	NRSA63J-103X	MG RESISTOR	10kΩ 1/16W J
R7659	NRSA63J-560X	MG RESISTOR	56Ω 1/16W J
R7661	NRSA63J-0R0X	MG RESISTOR	0Ω 1/16W J
R7662	NRSA63J-0R0X	MG RESISTOR	0Ω 1/16W J
R8796	NRSA63J-0R0X	MG RESISTOR	0Ω 1/16W J
R8797	NRSA63J-0R0X	MG RESISTOR	0Ω 1/16W J
R8798	NRSA63J-0R0X	MG RESISTOR	0Ω 1/16W J
R8799	NRSA63J-0R0X	MG RESISTOR	0Ω 1/16W J
R9001	NRSA63J-473X	MG RESISTOR	47kΩ 1/16W J
R9002	NRSA02J-0R0X	MG RESISTOR	0Ω 1/10W J
R9003	NRSA63D-273X	MG RESISTOR	27kΩ 1/16W D
R9004	NRSA63J-684X	MG RESISTOR	680kΩ 1/16W J
R9005	NRSA63D-103X	MG RESISTOR	10kΩ 1/16W D

⚠Ref No.	Part No.	Part Name	Description	Local
R9006	NRSA63J-512X	MG RESISTOR	5.1kΩ 1/16W J	
R9007	NRSA02J-0R0X	MG RESISTOR	0Ω 1/10W J	
R9008	NRSA63J-0R0X	MG RESISTOR	0Ω 1/16W J	
R9201	NRSA63J-473X	MG RESISTOR	47kΩ 1/16W J	
R9202	NRSA02J-0R0X	MG RESISTOR	0Ω 1/10W J	
R9203	NRSA63D-302X	MG RESISTOR	3kΩ 1/16W D	
R9205	NRSA63D-103X	MG RESISTOR	10kΩ 1/16W D	
R9206	NRSA63J-332X	MG RESISTOR	3.3kΩ 1/16W J	
R9207	NRSA02J-0R0X	MG RESISTOR	0Ω 1/10W J	
R9209	NRSA63J-0R0X	MG RESISTOR	0Ω 1/16W J	
R9306	NCB21EK-102X	C CAPACITOR	1000pF 25V K	
R9308	NRSA63J-0R0X	MG RESISTOR	0Ω 1/16W J	
R9501	NRSA63J-472X	MG RESISTOR	4.7kΩ 1/16W J	
R9502	NRSA63J-223X	MG RESISTOR	22kΩ 1/16W J	
R9503	NRSA63J-393X	MG RESISTOR	39kΩ 1/16W J	
R9504	NRSA63J-223X	MG RESISTOR	22kΩ 1/16W J	
R9505	NRSA63J-103X	MG RESISTOR	10kΩ 1/16W J	
R9506	NRSA63J-223X	MG RESISTOR	22kΩ 1/16W J	
R9507	NRSA63J-103X	MG RESISTOR	10kΩ 1/16W J	
R9508	NRSA63J-223X	MG RESISTOR	22kΩ 1/16W J	
R9509	NRSA63J-103X	MG RESISTOR	10kΩ 1/16W J	
R9510	NRSA63J-104X	MG RESISTOR	100kΩ 1/16W J	
RA6001	NRZ0080-0R0X	NET RESISTOR	0Ω 1/16W J	
RA6002	NRZ0034-0R0W	NET RESISTOR	0Ω 1/32W J x4	
RA6007	NRZ0080-0R0X	NET RESISTOR	0Ω 1/16W J	
RA6008	NRZ0080-0R0X	NET RESISTOR	0Ω 1/16W J	
RA6009	NRZ0034-0R0W	NET RESISTOR	0Ω 1/32W J x4	
RA6010	NRZ0034-0R0W	NET RESISTOR	0Ω 1/32W J x4	
RA6011	NRZ0080-0R0X	NET RESISTOR	0Ω 1/16W J	
RA6101	NRZ0040-220X	NET RESISTOR	22Ω 1/16W J x4	
RA6102	NRZ0080-220X	NET RESISTOR	22Ω 1/16W J	
RA6103	NRZ0040-220X	NET RESISTOR	22Ω 1/16W J x4	
RA6104	NRZ0040-220X	NET RESISTOR	22Ω 1/16W J x4	
RA6105	NRZ0080-220X	NET RESISTOR	22Ω 1/16W J	
RA6106	NRZ0040-220X	NET RESISTOR	22Ω 1/16W J x4	
RA6107	NRZ0080-220X	NET RESISTOR	22Ω 1/16W J	
RA6108	NRZ0080-220X	NET RESISTOR	22Ω 1/16W J	
RA6109	NRZ0040-470X	NET RESISTOR	47Ω 1/16W J x4	
RA6110	NRZ0080-470X	NET RESISTOR	47Ω 1/16W J	
RA6111	NRZ0040-470X	NET RESISTOR	47Ω 1/16W J x4	
RA6112	NRZ0040-470X	NET RESISTOR	47Ω 1/16W J x4	
RA6113	NRZ0080-470X	NET RESISTOR	47Ω 1/16W J	
RA6114	NRZ0040-470X	NET RESISTOR	47Ω 1/16W J x4	
RA6115	NRZ0080-470X	NET RESISTOR	47Ω 1/16W J	
RA6116	NRZ0080-470X	NET RESISTOR	47Ω 1/16W J	
RA6531	NRZ0034-0R0W	NET RESISTOR	0Ω 1/32W J x4	
RA6541	NRZ0033-0R0W	NET RESISTOR	0Ω	
RA6542	NRZ0080-0R0X	NET RESISTOR	0Ω 1/16W J	
RA6543	NRZ0033-0R0W	NET RESISTOR	0Ω	
RA6544	NRZ0080-0R0X	NET RESISTOR	0Ω 1/16W J	
RA6545	NRZ0033-0R0W	NET RESISTOR	0Ω	
RA6546	NRZ0080-0R0X	NET RESISTOR	0Ω 1/16W J	
RA7202	NRZ0080-473X	NET RESISTOR	47kΩ	
RA7203	NRZ0080-473X	NET RESISTOR	47kΩ	
RA7204	NRZ0080-473X	NET RESISTOR	47kΩ	
RA7205	NRZ0080-473X	NET RESISTOR	47kΩ	
RA7503	NQR0271-004X	EMI FILTER		
RA7601	NRZ0034-0R0W	NET RESISTOR	0Ω 1/32W J x4	
RA7602	NRZ0034-0R0W	NET RESISTOR	0Ω 1/32W J x4	
RA7603	NRZ0034-0R0W	NET RESISTOR	0Ω 1/32W J x4	
RA7605	NRZ0034-0R0W	NET RESISTOR	0Ω 1/32W J x4	
RA7606	NRZ0034-101W	NET RESISTOR	100Ω 1/32W J x4	
L6101	NRSA02J-0R0X	MG RESISTOR	0Ω 1/10W J	
L6102	NQL79GM-220X	COIL	22uH M	
L6103	NQL79GM-220X	COIL	22uH M	
L6115	NQR0499-001X	FERRITE BEADS		
L6254	NRSA02J-0R0X	MG RESISTOR	0Ω 1/10W J	
L6265	NQR0499-001X	FERRITE BEADS		
L6266	NQR0499-001X	FERRITE BEADS		
L6502	NRSA02J-0R0X	MG RESISTOR	0Ω 1/10W J	
L6521	NRZ0034-0R0W	NET RESISTOR	0Ω 1/32W J x4	
L6522	NRZ0034-0R0W	NET RESISTOR	0Ω 1/32W J x4	
L6523	NRZ0034-0R0W	NET RESISTOR	0Ω 1/32W J x4	
L6531	NQR0199-007X	FERRITE BEADS		
L6701	NQR0413-003X	FERRITE BEADS		
L6911	NQR0499-001X	FERRITE BEADS		
L6912	NQR0499-001X	FERRITE BEADS		
L6922	NQL79GM-220X	COIL	22uH M	
L6924	NQL79GM-220X	COIL	22uH M	
L6925	NQL79GM-220X	COIL	22uH M	
L6931	NQR0499-001X	FERRITE BEADS		
L7501	NRSA63J-0R0X	MG RESISTOR	0Ω 1/16W J	
L7502	NRSA63J-0R0X	MG RESISTOR	0Ω 1/16W J	
L9001	NQLC8CM-150X	COIL	15uH M	
L9201	NQLC8CM-150X	COIL	15uH M	
L9306	NQR0351-003X	FERRITE BEADS		
CN001	QGF0508C2-50W	CONNECTOR	FFC/FPC (1-50)	
CN002	QGF0508C2-40W	CONNECTOR	FFC/FPC (1-40)	

⚠Ref No.	Part No.	Part Name	Description	Local
J8501	NNZ0117-001	CONNECTOR	DIGITAL IN-1	
J8502	NNZ0117-001	CONNECTOR	DIGITAL IN-2	
K6250	NRSA02J-0R0X	MG RESISTOR	0Ω 1/10W J	
K6268	NRSA02J-0R0X	MG RESISTOR	0Ω 1/10W J	
K6271	NQR0499-001X	FERRITE BEADS		
K6272	NQR0499-001X	FERRITE BEADS		
K6274	NQR0499-001X	FERRITE BEADS		
K6921	NRSA02J-0R0X	MG RESISTOR	0Ω 1/10W J	
K7032	NRSA02J-0R0X	MG RESISTOR	0Ω 1/10W J	
K7033	NRSA02J-0R0X	MG RESISTOR	0Ω 1/10W J	
K7034	NRSA02J-0R0X	MG RESISTOR	0Ω 1/10W J	
K7202	NRSA63J-0R0X	MG RESISTOR	0Ω 1/16W J	
K7211	NQR0499-002X	FERRITE BEADS		
K7501	NQR0413-002X	FERRITE BEADS		
K7504	NRSA63J-0R0X	MG RESISTOR	0Ω 1/16W J	
K7601	NRSA02J-0R0X	MG RESISTOR	0Ω 1/10W J	
LC6501	NQR0479-001X	EMI FILTER		
LC7505	NQR0483-005X	EMI FILTER	100uF 25V Z	
LC9303	NQR0483-005X	EMI FILTER	100uF 25V Z	
LC9305	NQR0483-005X	EMI FILTER	100uF 25V Z	
LC9307	NQR0483-005X	EMI FILTER	100uF 25V Z	
X6250	NAX0580-001X	CXO	27.0000MHz	
X7001	NAX0669-001X	C RESONATOR	6.000MHz	
X7601	NAX0613-001X	C RESONATOR	16.000MHz	

ATSC TUNER MODULE P.W. BOARD ASS'Y (SSD-2204A-M2)

⚠Ref No.	Part No.	Part Name	Description	Local
⚠MD001	SSD-2204A-M2	ATSC TUNER MODULE PWB		

PRINTED WIRING BOARD PARTS LIST [LT-32X787/Z]

SD CARD P.W. BOARD ASS'Y (SFL-1305A-M2)

REFER TO PARTS LIST IN PAGE 3-8 FOR THIS P.W. BOARD.

ANALOG P.W. BOARD ASS'Y (SFL-1311A-M2)

REFER TO PARTS LIST IN PAGE 3-8 FOR THIS P.W. BOARD.

OPTICAL P.W. BOARD ASS'Y (SFL-2501A-M2)

REFER TO PARTS LIST IN PAGE 3-11 FOR THIS P.W. BOARD.

D-AMP P.W. BOARD ASS'Y (SFL-6301A-M2)

REFER TO PARTS LIST IN PAGE 3-11 FOR THIS P.W. BOARD.

SW P.W. BOARD ASS'Y (SFL-7207A-M2)

REFER TO PARTS LIST IN PAGE 3-12 FOR THIS P.W. BOARD.

LED P.W. BOARD ASS'Y (SFL-8901A-M2)

REFER TO PARTS LIST IN PAGE 3-12 FOR THIS P.W. BOARD.

POWER P.W. BOARD ASS'Y (SFL-9048A-M2)

REFER TO PARTS LIST IN PAGE 3-12 FOR THIS P.W. BOARD.

DC-DC P.W. BOARD ASS'Y (SFL-9154A-M2)

REFER TO PARTS LIST IN PAGE 3-13 FOR THIS P.W. BOARD.

DIGITAL P.W. BOARD ASS'Y (SFL0D175A-M2)

⚠Ref No.	Part No.	Part Name	Description	Local
IC6001	JCC5068	IC		
IC6002	SN74LVC1G08V-X	IC		
IC6101	EDD1232AAFA-6B	IC		
IC6102	LP2996MR-X	IC		
IC6250	UPC5702GS-027-X	IC		
IC6251	R1170H331B-X	IC		
IC6502	THC63LVDM83R-W	IC		
IC6724	S-80928CLNB-G-W	IC		
IC6901	R1141Q331B-X	IC		
IC7033	CD74HC4094PW-X	IC		
IC7036	ADC081S021CIS-X	IC		
IC7201	39VF800A7IEKDB6	IC(MICRO C ROM)		
IC7203	M12L16161A-7TG	IC		
IC7204	S-80928CLNB-G-W	IC		
IC7601	M306V7MG-153FP	IC(MCU)		
IC7602	ATF16-32X787Z	IC(DIGITAL)	(SERVICE)	
IC7603	SN74AHCT1G08V-X	IC		
IC7604	SN74LVC1G04V-X	IC		
IC7605	MM1673XN-X	IC		
IC7606	MM1673XN-X	IC		
IC9001	MP2263DN-C053-X	IC		
IC9101	MM1662FT-X	IC		
IC9201	MP2263DN-C053-X	IC		
IC9301	MM1701CH-X	IC		
Q6201	2SA1530A/QR/-X	TRANSISTOR		
Q6202	2SA1530A/QR/-X	TRANSISTOR		
Q6203	2SA1022/BC/-X	TRANSISTOR		
Q6204	2SA1022/BC/-X	TRANSISTOR		
Q6205	2SA1022/BC/-X	TRANSISTOR		
Q6206	2SA1022/BC/-X	TRANSISTOR		
Q6207	2SC3837K/NP/-X	TRANSISTOR		
Q6208	2SC3837K/NP/-X	TRANSISTOR		
Q6209	2SC3837K/NP/-X	TRANSISTOR		
Q6210	2SC3837K/NP/-X	TRANSISTOR		
Q6211	2SC3837K/NP/-X	TRANSISTOR		
Q6212	2SC3837K/NP/-X	TRANSISTOR		
Q6213	2SC3837K/NP/-X	TRANSISTOR		
Q6214	2SC3837K/NP/-X	TRANSISTOR		
Q6250	2SC3928A/QR/-X	TRANSISTOR		
Q6251	2SC3928A/QR/-X	TRANSISTOR		
Q6501	2SC3928A/QR/-X	TRANSISTOR		
Q6502	2SC3928A/QR/-X	TRANSISTOR		
Q7032	RT1P441C-X	DIGI TRANSISTOR		
Q7033	RT1P441C-X	DIGI TRANSISTOR		
Q7034	RT1P441C-X	DIGI TRANSISTOR		
Q7501	RT1N441C-X	TRANSISTOR		
Q9501	RT1N441C-X	TRANSISTOR		
Q9502	2SC3928A/QR/-X	TRANSISTOR		
Q9503	2SC3928A/QR/-X	TRANSISTOR		
D6503	1SS355W-X	DIODE		
D7502	1SS355W-X	DIODE		
D9001	EC30HA03L-X	SB DIODE		
D9002	EC30HA03L-X	SB DIODE		
D9003	PTZ3.9B-X	Z DIODE		
D9201	EC30HA03L-X	SB DIODE		
D9202	EC30HA03L-X	SB DIODE		
D9203	PTZ3.9B-X	Z DIODE		
D9204	1SS355W-X	DIODE		
D9501	1SS355W-X	DIODE		
D9502	1SS355W-X	DIODE		
C6002	NCB31CK-104X	C CAPACITOR	0.1uF 16V K	
C6101	NCB30JK-225X	C CAPACITOR	2.2uF 6.3V K	
C6103	NCB31AK-474X	C CAPACITOR	0.47uF 10V K	
C6107	NCB31AK-474X	C CAPACITOR	0.47uF 10V K	
C6109	NCB31CK-104X	C CAPACITOR	0.1uF 16V K	
C6111	NCB31CK-104X	C CAPACITOR	0.1uF 16V K	
C6112	NCB31CK-104X	C CAPACITOR	0.1uF 16V K	
C6113	NCB31AK-474X	C CAPACITOR	0.47uF 10V K	
C6114	NCB31CK-104X	C CAPACITOR	0.1uF 16V K	
C6116	NCB31AK-474X	C CAPACITOR	0.47uF 10V K	
C6117	NCB30JK-225X	C CAPACITOR	2.2uF 6.3V K	
C6118	NCB31AK-474X	C CAPACITOR	0.47uF 10V K	
C6119	NCB31AK-474X	C CAPACITOR	0.47uF 10V K	
C6121	NCB31AK-474X	C CAPACITOR	0.47uF 10V K	
C6122	NEHL0JM-107X	E CAPACITOR	100uF 6.3V M	
C6123	NCB31CK-104X	C CAPACITOR	0.1uF 16V K	
C6124	NEHL0JM-107X	E CAPACITOR	100uF 6.3V M	
C6125	NCB31CK-104X	C CAPACITOR	0.1uF 16V K	
C6126	NCB30JK-225X	C CAPACITOR	2.2uF 6.3V K	
C6128	NCB30JK-225X	C CAPACITOR	2.2uF 6.3V K	
C6130	NCB30JK-225X	C CAPACITOR	2.2uF 6.3V K	
C6132	NEHL1EM-226X	E CAPACITOR	22uF 25V M	
C6133	NCB31CK-154X	C CAPACITOR	0.15uF 16V K	
C6134	NCB11AK-106X	C CAPACITOR	10uF 10V K	
C6135	NCB31CK-104X	C CAPACITOR	0.1uF 16V K	
C6139	NCB31CK-104X	C CAPACITOR	0.1uF 16V K	
C6205	NCB31CK-104X	C CAPACITOR	0.1uF 16V K	
C6211	NCB31CK-104X	C CAPACITOR	0.1uF 16V K	
C6217	NCB31CK-104X	C CAPACITOR	0.1uF 16V K	
C6218	NCB31CK-104X	C CAPACITOR	0.1uF 16V K	
C6219	NCB31CK-104X	C CAPACITOR	0.1uF 16V K	
C6220	NCB31CK-104X	C CAPACITOR	0.1uF 16V K	
C6227	NCB31CK-104X	C CAPACITOR	0.1uF 16V K	
C6228	NCB31CK-104X	C CAPACITOR	0.1uF 16V K	
C6229	NCB31CK-104X	C CAPACITOR	0.1uF 16V K	
C6236	NCB31CK-104X	C CAPACITOR	0.1uF 16V K	
C6237	NCB31CK-104X	C CAPACITOR	0.1uF 16V K	
C6238	NCB31CK-104X	C CAPACITOR	0.1uF 16V K	
C6239	NCB31CK-104X	C CAPACITOR	0.1uF 16V K	
C6240	NCB31CK-104X	C CAPACITOR	0.1uF 16V K	
C6241	NCB11AK-106X	C CAPACITOR	10uF 10V K	
C6242	NCB31AK-105X	C CAPACITOR	1uF 10V K	
C6243	NCB11AK-106X	C CAPACITOR	10uF 10V K	
C6244	NCB31AK-105X	C CAPACITOR	1uF 10V K	
C6245	NCB11AK-106X	C CAPACITOR	10uF 10V K	
C6246	NCB31AK-105X	C CAPACITOR	1uF 10V K	
C6247	NCB11AK-106X	C CAPACITOR	10uF 10V K	
C6248	NCB31AK-105X	C CAPACITOR	1uF 10V K	
C6249	NCB31AK-105X	C CAPACITOR	1uF 10V K	
C6250	NCB11AK-106X	C CAPACITOR	10uF 10V K	
C6251	NCB31CK-104X	C CAPACITOR	0.1uF 16V K	
C6252	NCB11AK-106X	C CAPACITOR	10uF 10V K	
C6253	NCB11AK-106X	C CAPACITOR	10uF 10V K	
C6254	NCB11AK-106X	C CAPACITOR	10uF 10V K	
C6255	NCB11AK-106X	C CAPACITOR	10uF 10V K	
C6260	NCB21AK-225X	C CAPACITOR	2.2uF 10V K	
C6261	NCB21AK-225X	C CAPACITOR	2.2uF 10V K	
C6262	NCB21AK-225X	C CAPACITOR	2.2uF 10V K	
C6263	NCB21AK-225X	C CAPACITOR	2.2uF 10V K	
C6268	NCB31CK-104X	C CAPACITOR	0.1uF 16V K	

⚠Ref No.	Part No.	Part Name	Description Local
C6270	NCB31CK-104X	C CAPACITOR	0.1uF 16V K
C6271	NCB31CK-104X	C CAPACITOR	0.1uF 16V K
C6272	NCB31CK-104X	C CAPACITOR	0.1uF 16V K
C6273	NCB31CK-104X	C CAPACITOR	0.1uF 16V K
C6274	NCB31CK-104X	C CAPACITOR	0.1uF 16V K
C6276	NCB31CK-104X	C CAPACITOR	0.1uF 16V K
C6277	NCB31CK-104X	C CAPACITOR	0.1uF 16V K
C6278	NCB31CK-104X	C CAPACITOR	0.1uF 16V K
C6279	NCB31CK-104X	C CAPACITOR	0.1uF 16V K
C6280	NCB31CK-104X	C CAPACITOR	0.1uF 16V K
C6282	NCB31CK-104X	C CAPACITOR	0.1uF 16V K
C6283	NCB31CK-104X	C CAPACITOR	0.1uF 16V K
C6284	NCB31CK-104X	C CAPACITOR	0.1uF 16V K
C6285	NCB31CK-104X	C CAPACITOR	0.1uF 16V K
C6286	NCB31CK-104X	C CAPACITOR	0.1uF 16V K
C6288	NCB31CK-104X	C CAPACITOR	0.1uF 16V K
C6289	NCB31CK-104X	C CAPACITOR	0.1uF 16V K
C6291	NCB31CK-104X	C CAPACITOR	0.1uF 16V K
C6293	NCB31CK-104X	C CAPACITOR	0.1uF 16V K
C6294	NBZ0007-107X	SP E CAPACITOR	100uF 4V M
C6295	NBZ0007-107X	SP E CAPACITOR	100uF 4V M
C6296	NCB11AK-106X	C CAPACITOR	10uF 10V K
C6297	NCB11AK-106X	C CAPACITOR	10uF 10V K
C6299	NCB31CK-104X	C CAPACITOR	0.1uF 16V K
C6300	NCB31CK-104X	C CAPACITOR	0.1uF 16V K
C6301	NCB31CK-104X	C CAPACITOR	0.1uF 16V K
C6520	NCB11AK-106X	C CAPACITOR	10uF 10V K
C6521	NCB31CK-104X	C CAPACITOR	0.1uF 16V K
C6522	NCB31CK-104X	C CAPACITOR	0.1uF 16V K
C6523	NCB31CK-104X	C CAPACITOR	0.1uF 16V K
C6524	NCB31CK-104X	C CAPACITOR	0.1uF 16V K
C6525	NCB31CK-104X	C CAPACITOR	0.1uF 16V K
C6531	NCB31CK-104X	C CAPACITOR	0.1uF 16V K
C6532	NCB31CK-104X	C CAPACITOR	0.1uF 16V K
C6533	NRSA63J-102X	MG RESISTOR	1kΩ 1/16W J
C6573	NCB21CK-105X	C CAPACITOR	1uF 16V K
C6602	NCB31CK-104X	C CAPACITOR	0.1uF 16V K
C6603	NCB31CK-104X	C CAPACITOR	0.1uF 16V K
C6610	NCF31CZ-104X	C CAPACITOR	0.1uF 16V Z
C6611	NCF31CZ-104X	C CAPACITOR	0.1uF 16V Z
C6612	NCF31CZ-104X	C CAPACITOR	0.1uF 16V Z
C6613	NCF31CZ-104X	C CAPACITOR	0.1uF 16V Z
C6614	NCF31CZ-104X	C CAPACITOR	0.1uF 16V Z
C6615	NCF31CZ-104X	C CAPACITOR	0.1uF 16V Z
C6616	NCF31CZ-104X	C CAPACITOR	0.1uF 16V Z
C6617	NCF31CZ-104X	C CAPACITOR	0.1uF 16V Z
C6618	NCF31CZ-104X	C CAPACITOR	0.1uF 16V Z
C6619	NCF31CZ-104X	C CAPACITOR	0.1uF 16V Z
C6620	NCF31CZ-104X	C CAPACITOR	0.1uF 16V Z
C6621	NCF31CZ-104X	C CAPACITOR	0.1uF 16V Z
C6622	NCF31CZ-104X	C CAPACITOR	0.1uF 16V Z
C6623	NCF31CZ-104X	C CAPACITOR	0.1uF 16V Z
C6624	NCF31CZ-104X	C CAPACITOR	0.1uF 16V Z
C6625	NCF31CZ-104X	C CAPACITOR	0.1uF 16V Z
C6626	NCF31CZ-104X	C CAPACITOR	0.1uF 16V Z
C6627	NCF31CZ-104X	C CAPACITOR	0.1uF 16V Z
C6628	NCF31CZ-104X	C CAPACITOR	0.1uF 16V Z
C6629	NCF31CZ-104X	C CAPACITOR	0.1uF 16V Z
C6630	NCF31CZ-104X	C CAPACITOR	0.1uF 16V Z
C6631	NCF31CZ-104X	C CAPACITOR	0.1uF 16V Z
C6632	NCF31CZ-104X	C CAPACITOR	0.1uF 16V Z
C6633	NCF31CZ-104X	C CAPACITOR	0.1uF 16V Z
C6634	NCF31CZ-104X	C CAPACITOR	0.1uF 16V Z
C6635	NCF31CZ-104X	C CAPACITOR	0.1uF 16V Z
C6636	NCF31CZ-104X	C CAPACITOR	0.1uF 16V Z
C6637	NCF31CZ-104X	C CAPACITOR	0.1uF 16V Z
C6638	NCF31CZ-104X	C CAPACITOR	0.1uF 16V Z
C6639	NCF31CZ-104X	C CAPACITOR	0.1uF 16V Z
C6640	NCF31CZ-104X	C CAPACITOR	0.1uF 16V Z
C6641	NCF31CZ-104X	C CAPACITOR	0.1uF 16V Z
C6642	NCF31CZ-104X	C CAPACITOR	0.1uF 16V Z
C6643	NCF31CZ-104X	C CAPACITOR	0.1uF 16V Z
C6644	NCF31CZ-104X	C CAPACITOR	0.1uF 16V Z
C6645	NCF31CZ-104X	C CAPACITOR	0.1uF 16V Z
C6656	NCF31CZ-104X	C CAPACITOR	0.1uF 16V Z
C6657	NCF31CZ-104X	C CAPACITOR	0.1uF 16V Z
C6658	NCF31CZ-104X	C CAPACITOR	0.1uF 16V Z
C6659	NCF31CZ-104X	C CAPACITOR	0.1uF 16V Z
C6660	NCF31CZ-104X	C CAPACITOR	0.1uF 16V Z
C6661	NCF31CZ-104X	C CAPACITOR	0.1uF 16V Z
C6677	NCF31CZ-104X	C CAPACITOR	0.1uF 16V Z
C6678	NCF31CZ-104X	C CAPACITOR	0.1uF 16V Z
C6679	NCF31CZ-104X	C CAPACITOR	0.1uF 16V Z
C6680	NCF31CZ-104X	C CAPACITOR	0.1uF 16V Z
C6681	NCF31CZ-104X	C CAPACITOR	0.1uF 16V Z
C6682	NCF31CZ-104X	C CAPACITOR	0.1uF 16V Z
C6683	NCF31CZ-104X	C CAPACITOR	0.1uF 16V Z
C6684	NCF31CZ-104X	C CAPACITOR	0.1uF 16V Z
C6685	NCF31CZ-104X	C CAPACITOR	0.1uF 16V Z
C6686	NCF31CZ-104X	C CAPACITOR	0.1uF 16V Z
C6687	NCF31CZ-104X	C CAPACITOR	0.1uF 16V Z
C6688	NCF31CZ-104X	C CAPACITOR	0.1uF 16V Z
C6689	NCF31CZ-104X	C CAPACITOR	0.1uF 16V Z
C6690	NCF31CZ-104X	C CAPACITOR	0.1uF 16V Z
C6691	NCF31CZ-104X	C CAPACITOR	0.1uF 16V Z
C6692	NCF31CZ-104X	C CAPACITOR	0.1uF 16V Z
C6693	NCF31CZ-104X	C CAPACITOR	0.1uF 16V Z
C6694	NCF31CZ-104X	C CAPACITOR	0.1uF 16V Z
C6695	NCF31CZ-104X	C CAPACITOR	0.1uF 16V Z
C6696	NCF31CZ-104X	C CAPACITOR	0.1uF 16V Z
C6697	NCF31CZ-104X	C CAPACITOR	0.1uF 16V Z
C6698	NCF31CZ-104X	C CAPACITOR	0.1uF 16V Z
C6699	NCF31CZ-104X	C CAPACITOR	0.1uF 16V Z
C6701	NCF11CZ-475X	C CAPACITOR	4.7uF 16V Z
C6723	NCB31HK-222X	C CAPACITOR	2200pF 50V K
C6724	NCB31HK-103X	C CAPACITOR	0.01uF 50V K
C6901	NBZ0007-107X	SP E CAPACITOR	100uF 4V M
C6902	NCB31CK-104X	C CAPACITOR	0.1uF 16V K
C6903	NCB31CK-104X	C CAPACITOR	0.1uF 16V K
C6904	NCB31CK-104X	C CAPACITOR	0.1uF 16V K
C6905	NCB31CK-104X	C CAPACITOR	0.1uF 16V K
C6906	NCB31CK-104X	C CAPACITOR	0.1uF 16V K
C6907	NCB31CK-104X	C CAPACITOR	0.1uF 16V K
C6908	NCB31CK-104X	C CAPACITOR	0.1uF 16V K
C6909	NCB31CK-104X	C CAPACITOR	0.1uF 16V K
C6910	NCB31CK-104X	C CAPACITOR	0.1uF 16V K
C6911	NCB31CK-104X	C CAPACITOR	0.1uF 16V K
C6912	NCB11AK-106X	C CAPACITOR	10uF 10V K
C6913	NCB31CK-104X	C CAPACITOR	0.1uF 16V K
C6914	NCB31CK-104X	C CAPACITOR	0.1uF 16V K
C6915	NCB31CK-104X	C CAPACITOR	0.1uF 16V K
C6916	NCB31CK-104X	C CAPACITOR	0.1uF 16V K
C6917	NCB31CK-104X	C CAPACITOR	0.1uF 16V K
C6918	NCB31CK-104X	C CAPACITOR	0.1uF 16V K
C6919	NCB31CK-104X	C CAPACITOR	0.1uF 16V K
C6921	NCB11AK-106X	C CAPACITOR	10uF 10V K
C6922	NCB31CK-104X	C CAPACITOR	0.1uF 16V K
C6923	NCB11AK-106X	C CAPACITOR	10uF 10V K
C6924	NCB31CK-104X	C CAPACITOR	0.1uF 16V K
C6925	NCB11AK-106X	C CAPACITOR	10uF 10V K
C6926	NCB31CK-104X	C CAPACITOR	0.1uF 16V K
C6927	NCB11AK-106X	C CAPACITOR	10uF 10V K
C6928	NCB31CK-104X	C CAPACITOR	0.1uF 16V K
C6929	NCB31AK-105X	C CAPACITOR	1uF 10V K
C7030	NCB31HK-103X	C CAPACITOR	0.01uF 50V K
C7031	NCB31HK-103X	C CAPACITOR	0.01uF 50V K
C7034	NCB31HK-153X	C CAPACITOR	0.015uF 50V K
C7039	NCB31HK-102X	C CAPACITOR	1000pF 50V K
C7040	NCB11AK-106X	C CAPACITOR	10uF 10V K
C7044	NCB31CK-104X	C CAPACITOR	0.1uF 16V K
C7051	NCB31CK-104X	C CAPACITOR	0.1uF 16V K
C7052	NCB31CK-104X	C CAPACITOR	0.1uF 16V K
C7053	NCB31CK-104X	C CAPACITOR	0.1uF 16V K
C7054	NCB31CK-104X	C CAPACITOR	0.1uF 16V K
C7055	NCB31CK-104X	C CAPACITOR	0.1uF 16V K
C7056	NCB31CK-104X	C CAPACITOR	0.1uF 16V K
C7057	NCB31CK-104X	C CAPACITOR	0.1uF 16V K
C7058	NCB31CK-104X	C CAPACITOR	0.1uF 16V K
C7059	NCB31CK-104X	C CAPACITOR	0.1uF 16V K
C7060	NCB31CK-104X	C CAPACITOR	0.1uF 16V K
C7061	NCB31CK-104X	C CAPACITOR	0.1uF 16V K
C7062	NCB31CK-104X	C CAPACITOR	0.1uF 16V K
C7063	NCB31CK-104X	C CAPACITOR	0.1uF 16V K
C7064	NCB31CK-104X	C CAPACITOR	0.1uF 16V K
C7065	NCB31CK-104X	C CAPACITOR	0.1uF 16V K
C7066	NCB31CK-104X	C CAPACITOR	0.1uF 16V K
C7067	NCB31CK-104X	C CAPACITOR	0.1uF 16V K
C7068	NCB31CK-104X	C CAPACITOR	0.1uF 16V K
C7073	NCB31CK-104X	C CAPACITOR	0.1uF 16V K
C7202	NCB31CK-104X	C CAPACITOR	0.1uF 16V K
C7203	NCB31CK-104X	C CAPACITOR	0.1uF 16V K
C7204	NCB31CK-104X	C CAPACITOR	0.1uF 16V K
C7205	NCB31CK-104X	C CAPACITOR	0.1uF 16V K
C7206	NCB31CK-104X	C CAPACITOR	0.1uF 16V K
C7207	NCB31CK-104X	C CAPACITOR	0.1uF 16V K
C7208	NCB31CK-104X	C CAPACITOR	0.1uF 16V K
C7209	NCB31CK-104X	C CAPACITOR	0.1uF 16V K
C7211	NCB31HK-102X	C CAPACITOR	1000pF 50V K
C7215	NDC31HJ-330X	C CAPACITOR	33pF 50V J
C7501	NCF31CZ-104X	C CAPACITOR	0.1uF 16V Z
C7506	NCB31HK-103X	C CAPACITOR	0.01uF 50V K
C7507	NCB31HK-103X	C CAPACITOR	0.01uF 50V K
C7508	NCB31CK-104X	C CAPACITOR	0.1uF 16V K
C7510	NCB31HK-103X	C CAPACITOR	0.01uF 50V K
C7514	NCB31HK-103X	C CAPACITOR	0.01uF 50V K
C7515	NCB31HK-103X	C CAPACITOR	0.01uF 50V K
C7517	NCB31HK-103X	C CAPACITOR	0.01uF 50V K
C7601	NCB11CK-105X	C CAPACITOR	1uF 16V K
C7602	NCB31CK-104X	C CAPACITOR	0.1uF 16V K
C7603	NCB31CK-104X	C CAPACITOR	0.1uF 16V K

⚠Ref No.	Part No.	Part Name	Description Local
C7604	NCB31HK-102X	C CAPACITOR	1000pF 50V K
C7605	NCB31HK-221X	C CAPACITOR	220pF 50V K
C7606	NCB21AK-225X	C CAPACITOR	2.2uF 10V K
C7607	NCB31HK-681X	C CAPACITOR	680pF 50V K
C7608	NCB31CK-104X	C CAPACITOR	0.1uF 16V K
C7609	NCB31HK-681X	C CAPACITOR	680pF 50V K
C7610	NDC31HJ-102X	C CAPACITOR	1000pF 50V J
C7611	NDC31HJ-221X	C CAPACITOR	220pF 50V J
C7612	NCB21AK-225X	C CAPACITOR	2.2uF 10V K
C7615	NCB31CK-104X	C CAPACITOR	0.1uF 16V K
C7616	NCB31CK-104X	C CAPACITOR	0.1uF 16V K
C7617	NCB31CK-104X	C CAPACITOR	0.1uF 16V K
C7618	NCF11CZ-475X	C CAPACITOR	4.7uF 16V Z
C7619	NCB11AK-106X	C CAPACITOR	10uF 10V K
C7620	NCF11CZ-475X	C CAPACITOR	4.7uF 16V Z
C7621	NCB11AK-106X	C CAPACITOR	10uF 10V K
C7631	NCB31AK-224X	C CAPACITOR	0.22uF 10V K
C7632	NCB31AK-224X	C CAPACITOR	0.22uF 10V K
C7633	NDC31HJ-151X	C CAPACITOR	150pF 50V J
C9001	NDC31HJ-102X	C CAPACITOR	1000pF 50V J
C9002	NCJ41EK-106X-U	C CAPACITOR	10mF 25V K
C9003	NCB31EK-104X	C CAPACITOR	0.1uF 25V K
C9004	NCB31HK-103X	C CAPACITOR	0.01uF 50V K
C9005	NCJ41CK-226X-U	C CAPACITOR	22mF 16V K
C9006	NDC31HJ-120X	C CAPACITOR	12pF 50V J
C9007	NCB31HK-103X	C CAPACITOR	0.01uF 50V K
C9010	NCJ41CK-226X-U	C CAPACITOR	22mF 16V K
C9101	NCB11CK-475X	C CAPACITOR	4.7uF 16V K
C9103	NCB11CK-225X	C CAPACITOR	2.2uF 16V K
C9201	NDC31HJ-102X	C CAPACITOR	1000pF 50V J
C9202	NCJ41EK-106X-U	C CAPACITOR	10mF 25V K
C9204	NCB31HK-103X	C CAPACITOR	0.01uF 50V K
C9205	NCJ41CK-226X-U	C CAPACITOR	22mF 16V K
C9206	NDC31HJ-120X	C CAPACITOR	12pF 50V J
C9207	NCB31HK-153X	C CAPACITOR	0.015uF 50V K
C9208	NCJ41CK-226X-U	C CAPACITOR	22mF 16V K
C9209	NCB31HK-102X	C CAPACITOR	1000pF 50V K
C9211	NCB31HK-473X	C CAPACITOR	0.047uF 50V K
C9302	NCB11CK-475X	C CAPACITOR	4.7uF 16V K
C9303	NCB31HK-103X	C CAPACITOR	0.01uF 50V K
C9304	NCB11CK-475X	C CAPACITOR	4.7uF 16V K
C9501	NCB31CK-105X	C CAPACITOR	1uF 16V K
C9502	NCB31CK-105X	C CAPACITOR	1uF 16V K
R6002	NRSA63J-0R0X	MG RESISTOR	0Ω 1/16W J
R6003	NRSA63J-0R0X	MG RESISTOR	0Ω 1/16W J
R6006	NRSA63J-0R0X	MG RESISTOR	0Ω 1/16W J
R6008	NRSA63J-0R0X	MG RESISTOR	0Ω 1/16W J
R6009	NRSA63J-220X	MG RESISTOR	22Ω 1/16W J
R6014	NRSA63J-0R0X	MG RESISTOR	0Ω 1/16W J
R6017	NRSA63J-0R0X	MG RESISTOR	0Ω 1/16W J
R6018	NRSA63J-0R0X	MG RESISTOR	0Ω 1/16W J
R6019	NRSA63J-0R0X	MG RESISTOR	0Ω 1/16W J
R6020	NRSA63J-0R0X	MG RESISTOR	0Ω 1/16W J
R6073	NRSA63J-0R0X	MG RESISTOR	0Ω 1/16W J
R6074	NRSA63J-0R0X	MG RESISTOR	0Ω 1/16W J
R6075	NRSA63J-0R0X	MG RESISTOR	0Ω 1/16W J
R6080	NRSA63J-0R0X	MG RESISTOR	0Ω 1/16W J
R6101	NRSA63J-220X	MG RESISTOR	22Ω 1/16W J
R6102	NRSA63J-220X	MG RESISTOR	22Ω 1/16W J
R6103	NRSA63J-220X	MG RESISTOR	22Ω 1/16W J
R6104	NRSA63J-220X	MG RESISTOR	22Ω 1/16W J
R6105	NRSA63J-220X	MG RESISTOR	22Ω 1/16W J
R6106	NRSA63J-220X	MG RESISTOR	22Ω 1/16W J
R6107	NRSA63J-100X	MG RESISTOR	10Ω 1/16W J
R6108	NRSA63J-100X	MG RESISTOR	10Ω 1/16W J
R6109	NRSA63J-220X	MG RESISTOR	22Ω 1/16W J
R6110	NRSA63J-220X	MG RESISTOR	22Ω 1/16W J
R6111	NRSA63J-220X	MG RESISTOR	22Ω 1/16W J
R6112	NRSA63J-470X	MG RESISTOR	47Ω 1/16W J
R6113	NRSA63J-470X	MG RESISTOR	47Ω 1/16W J
R6114	NRSA63J-470X	MG RESISTOR	47Ω 1/16W J
R6115	NRSA63J-470X	MG RESISTOR	47Ω 1/16W J
R6116	NRSA63J-470X	MG RESISTOR	47Ω 1/16W J
R6117	NRSA63J-470X	MG RESISTOR	47Ω 1/16W J
R6118	NRSA63J-470X	MG RESISTOR	47Ω 1/16W J
R6119	NRSA63J-470X	MG RESISTOR	47Ω 1/16W J
R6120	NRSA63J-470X	MG RESISTOR	47Ω 1/16W J
R6121	NRSA63J-470X	MG RESISTOR	47Ω 1/16W J
R6122	NRSA63J-470X	MG RESISTOR	47Ω 1/16W J
R6127	NRSA63J-1R5X	MG RESISTOR	1.5Ω 1/16W J
R6141	NRSA63J-0R0X	MG RESISTOR	0Ω 1/16W J
R6142	NRSA63J-0R0X	MG RESISTOR	0Ω 1/16W J
R6201	NRSA63J-0R0X	MG RESISTOR	0Ω 1/16W J
R6202	NRSA63J-0R0X	MG RESISTOR	0Ω 1/16W J
R6203	NRSA63J-0R0X	MG RESISTOR	0Ω 1/16W J
R6204	NRSA63J-0R0X	MG RESISTOR	0Ω 1/16W J
R6205	NRSA63J-332X	MG RESISTOR	3.3kΩ 1/16W J
R6207	NRSA63J-0R0X	MG RESISTOR	0Ω 1/16W J
R6209	NRSA63J-0R0X	MG RESISTOR	0Ω 1/16W J

⚠Ref No.	Part No.	Part Name	Description Local
R6214	NRSA63J-0R0X	MG RESISTOR	0Ω 1/16W J
R6215	NRSA63J-0R0X	MG RESISTOR	0Ω 1/16W J
R6216	NRSA63J-0R0X	MG RESISTOR	0Ω 1/16W J
R6217	NRSA63J-0R0X	MG RESISTOR	0Ω 1/16W J
R6220	NRSA63J-682X	MG RESISTOR	6.8kΩ 1/16W J
R6227	NRSA63J-391X	MG RESISTOR	390Ω 1/16W J
R6228	NRSA63J-332X	MG RESISTOR	3.3kΩ 1/16W J
R6229	NRSA63J-682X	MG RESISTOR	6.8kΩ 1/16W J
R6230	NRSA63J-0R0X	MG RESISTOR	0Ω 1/16W J
R6231	NRSA63J-0R0X	MG RESISTOR	0Ω 1/16W J
R6232	NRSA63J-0R0X	MG RESISTOR	0Ω 1/16W J
R6233	NRSA63J-0R0X	MG RESISTOR	0Ω 1/16W J
R6234	NRSA63J-391X	MG RESISTOR	390Ω 1/16W J
R6235	NRSA63J-101X	MG RESISTOR	100Ω 1/16W J
R6236	NRSA63J-331X	MG RESISTOR	330Ω 1/16W J
R6237	NRSA63J-332X	MG RESISTOR	3.3kΩ 1/16W J
R6238	NRSA63J-101X	MG RESISTOR	100Ω 1/16W J
R6239	NRSA63J-331X	MG RESISTOR	330Ω 1/16W J
R6240	NRSA63J-682X	MG RESISTOR	6.8kΩ 1/16W J
R6241	NRSA63J-101X	MG RESISTOR	100Ω 1/16W J
R6242	NRSA63J-331X	MG RESISTOR	330Ω 1/16W J
R6243	NRSA63J-102X	MG RESISTOR	1kΩ 1/16W J
R6244	NRSA63J-101X	MG RESISTOR	100Ω 1/16W J
R6245	NRSA63J-331X	MG RESISTOR	330Ω 1/16W J
R6246	NRSA63J-332X	MG RESISTOR	3.3kΩ 1/16W J
R6247	NRSA63J-682X	MG RESISTOR	6.8kΩ 1/16W J
R6248	NRSA63J-473X	MG RESISTOR	47kΩ 1/16W J
R6249	NRSA63J-333X	MG RESISTOR	33kΩ 1/16W J
R6251	NRSA63J-0R0X	MG RESISTOR	0Ω 1/16W J
R6252	NRSA63J-0R0X	MG RESISTOR	0Ω 1/16W J
R6253	NRSA63J-222X	MG RESISTOR	2.2kΩ 1/16W J
R6254	NRSA63J-151X	MG RESISTOR	150Ω 1/16W J
R6255	NRSA63J-472X	MG RESISTOR	4.7kΩ 1/16W J
R6256	NRSA63J-0R0X	MG RESISTOR	0Ω 1/16W J
R6257	NRSA63J-222X	MG RESISTOR	2.2kΩ 1/16W J
R6258	NRSA63J-151X	MG RESISTOR	150Ω 1/16W J
R6259	NRSA63J-472X	MG RESISTOR	4.7kΩ 1/16W J
R6260	NRSA63J-0R0X	MG RESISTOR	0Ω 1/16W J
R6261	NRSA63J-222X	MG RESISTOR	2.2kΩ 1/16W J
R6262	NRSA63J-151X	MG RESISTOR	150Ω 1/16W J
R6263	NRSA63J-472X	MG RESISTOR	4.7kΩ 1/16W J
R6264	NRSA63J-0R0X	MG RESISTOR	0Ω 1/16W J
R6265	NRSA63J-103X	MG RESISTOR	10kΩ 1/16W J
R6266	NRSA63J-221X	MG RESISTOR	220Ω 1/16W J
R6267	NRSA63J-472X	MG RESISTOR	4.7kΩ 1/16W J
R6268	NRSA63D-242X	MG RESISTOR	2.4kΩ 1/16W D
R6269	NRSA63D-242X	MG RESISTOR	2.4kΩ 1/16W D
R6270	NRSA63D-242X	MG RESISTOR	2.4kΩ 1/16W D
R6271	NRSA63D-242X	MG RESISTOR	2.4kΩ 1/16W D
R6273	NRSA63J-0R0X	MG RESISTOR	0Ω 1/16W J
R6274	NRSA63J-220X	MG RESISTOR	22Ω 1/16W J
R6275	NRSA63J-0R0X	MG RESISTOR	0Ω 1/16W J
R6276	NRSA63J-0R0X	MG RESISTOR	0Ω 1/16W J
R6277	NRSA63J-391X	MG RESISTOR	390Ω 1/16W J
R6279	NRSA63J-0R0X	MG RESISTOR	0Ω 1/16W J
R6280	NRSA63J-331X	MG RESISTOR	330Ω 1/16W J
R6281	NRSA63J-101X	MG RESISTOR	100Ω 1/16W J
R6282	NRSA63J-331X	MG RESISTOR	330Ω 1/16W J
R6283	NRSA63J-101X	MG RESISTOR	100Ω 1/16W J
R6284	NRSA63J-0R0X	MG RESISTOR	0Ω 1/16W J
R6285	NRSA63J-0R0X	MG RESISTOR	0Ω 1/16W J
R6286	NRSA63J-391X	MG RESISTOR	390Ω 1/16W J
R6287	NRSA63J-391X	MG RESISTOR	390Ω 1/16W J
R6288	NRSA63J-391X	MG RESISTOR	390Ω 1/16W J
R6289	NRSA63J-102X	MG RESISTOR	1kΩ 1/16W J
R6290	NRSA63J-0R0X	MG RESISTOR	0Ω 1/16W J
R6291	NRSA63J-473X	MG RESISTOR	47kΩ 1/16W J
R6292	NRSA63J-473X	MG RESISTOR	47kΩ 1/16W J
R6297	NRSA63J-0R0X	MG RESISTOR	0Ω 1/16W J
R6298	NRSA63J-0R0X	MG RESISTOR	0Ω 1/16W J
R6300	NRSA63J-0R0X	MG RESISTOR	0Ω 1/16W J
R6302	NRSA63J-0R0X	MG RESISTOR	0Ω 1/16W J
R6305	NRSA63J-0R0X	MG RESISTOR	0Ω 1/16W J
R6332	NRSA63J-0R0X	MG RESISTOR	0Ω 1/16W J
R6333	NRSA63J-0R0X	MG RESISTOR	0Ω 1/16W J
R6338	NRSA63J-0R0X	MG RESISTOR	0Ω 1/16W J
R6339	NRSA63J-0R0X	MG RESISTOR	0Ω 1/16W J
R6503	NRSA63J-0R0X	MG RESISTOR	0Ω 1/16W J
R6521	NRSA63J-101X	MG RESISTOR	100Ω 1/16W J
R6522	NRSA63J-101X	MG RESISTOR	100Ω 1/16W J
R6523	NRSA63J-102X	MG RESISTOR	1kΩ 1/16W J
R6524	NRSA63J-102X	MG RESISTOR	1kΩ 1/16W J
R6525	NRSA63J-0R0X	MG RESISTOR	0Ω 1/16W J
R6529	NRSA63J-0R0X	MG RESISTOR	0Ω 1/16W J
R6532	NRSA63J-102X	MG RESISTOR	1kΩ 1/16W J
R6533	NRSA63J-0R0X	MG RESISTOR	0Ω 1/16W J
R6534	NRSA63J-0R0X	MG RESISTOR	0Ω 1/16W J
R6535	NRSA63J-102X	MG RESISTOR	1kΩ 1/16W J
R6537	NRSA63J-0R0X	MG RESISTOR	0Ω 1/16W J
R6538	NRSA63J-103X	MG RESISTOR	10kΩ 1/16W J

⚠Ref No.	Part No.	Part Name	Description Local
R6539	NRSA63J-473X	MG RESISTOR	47kΩ 1/16W J
R6541	NRSA63J-102X	MG RESISTOR	1kΩ 1/16W J
R6547	NRSA63J-102X	MG RESISTOR	1kΩ 1/16W J
R6548	NRSA63J-103X	MG RESISTOR	10kΩ 1/16W J
R6549	NRSA63J-103X	MG RESISTOR	10kΩ 1/16W J
R6569	NRSA63J-0R0X	MG RESISTOR	0Ω 1/16W J
R6575	NRSA63J-0R0X	MG RESISTOR	0Ω 1/16W J
R6576	NRSA63J-0R0X	MG RESISTOR	0Ω 1/16W J
R6595	NRSA63J-473X	MG RESISTOR	47kΩ 1/16W J
R6596	NRSA63J-153X	MG RESISTOR	15kΩ 1/16W J
R6599	NRSA63J-823X	MG RESISTOR	82kΩ 1/16W J
R6607	NRSA63J-101X	MG RESISTOR	100Ω 1/16W J
R6609	NRSA63J-101X	MG RESISTOR	100Ω 1/16W J
R6611	NRSA63J-102X	MG RESISTOR	1kΩ 1/16W J
R6707	NRSA63J-0R0X	MG RESISTOR	0Ω 1/16W J
R6712	NRSA63J-0R0X	MG RESISTOR	0Ω 1/16W J
R6713	NRSA63J-0R0X	MG RESISTOR	0Ω 1/16W J
R6730	NRSA63J-0R0X	MG RESISTOR	0Ω 1/16W J
R6731	NRSA63J-0R0X	MG RESISTOR	0Ω 1/16W J
R6732	NRSA63J-0R0X	MG RESISTOR	0Ω 1/16W J
R6921	NRSA63J-0R0X	MG RESISTOR	0Ω 1/16W J
R6922	NRSA63J-0R0X	MG RESISTOR	0Ω 1/16W J
R6923	NRSA63J-0R0X	MG RESISTOR	0Ω 1/16W J
R6924	NRSA63J-0R0X	MG RESISTOR	0Ω 1/16W J
R7031	NRSA63J-0R0X	MG RESISTOR	0Ω 1/16W J
R7032	NRSA63J-151X	MG RESISTOR	150Ω 1/16W J
R7033	NRSA63J-0R0X	MG RESISTOR	0Ω 1/16W J
R7034	NRSA63J-0R0X	MG RESISTOR	0Ω 1/16W J
R7036	NRSA63J-0R0X	MG RESISTOR	0Ω 1/16W J
R7039	NRSA63J-102X	MG RESISTOR	1kΩ 1/16W J
R7041	NRSA63J-223X	MG RESISTOR	22kΩ 1/16W J
R7042	NRSA63J-333X	MG RESISTOR	33kΩ 1/16W J
R7044	NRSA63J-0R0X	MG RESISTOR	0Ω 1/16W J
R7047	NRSA63J-0R0X	MG RESISTOR	0Ω 1/16W J
R7049	NRSA63J-0R0X	MG RESISTOR	0Ω 1/16W J
R7051	NRSA63J-0R0X	MG RESISTOR	0Ω 1/16W J
R7052	NRSA63J-0R0X	MG RESISTOR	0Ω 1/16W J
R7054	NRSA63J-0R0X	MG RESISTOR	0Ω 1/16W J
R7055	NRSA63J-0R0X	MG RESISTOR	0Ω 1/16W J
R7056	NRSA63J-0R0X	MG RESISTOR	0Ω 1/16W J
R7057	NRSA63J-0R0X	MG RESISTOR	0Ω 1/16W J
R7058	NRSA63J-0R0X	MG RESISTOR	0Ω 1/16W J
R7059	NRSA63J-0R0X	MG RESISTOR	0Ω 1/16W J
R7060	NRSA63J-154X	MG RESISTOR	150kΩ 1/16W J
R7061	NRSA63J-0R0X	MG RESISTOR	0Ω 1/16W J
R7062	NRSA63J-0R0X	MG RESISTOR	0Ω 1/16W J
R7063	NRSA63J-0R0X	MG RESISTOR	0Ω 1/16W J
R7064	NRSA63J-103X	MG RESISTOR	10kΩ 1/16W J
R7065	NRSA63J-103X	MG RESISTOR	10kΩ 1/16W J
R7066	NRSA63J-562X	MG RESISTOR	5.6kΩ 1/16W J
R7067	NRSA63J-562X	MG RESISTOR	5.6kΩ 1/16W J
R7068	NRSA63J-0R0X	MG RESISTOR	0Ω 1/16W J
R7069	NRSA63J-0R0X	MG RESISTOR	0Ω 1/16W J
R7072	NRSA63J-0R0X	MG RESISTOR	0Ω 1/16W J
R7077	NRSA63J-102X	MG RESISTOR	1kΩ 1/16W J
R7078	NRSA63J-0R0X	MG RESISTOR	0Ω 1/16W J
R7081	NRSA63J-473X	MG RESISTOR	47kΩ 1/16W J
R7084	NRSA63J-221X	MG RESISTOR	220Ω 1/16W J
R7085	NRSA63J-221X	MG RESISTOR	220Ω 1/16W J
R7086	NRSA63J-0R0X	MG RESISTOR	0Ω 1/16W J
R7087	NRSA63J-0R0X	MG RESISTOR	0Ω 1/16W J
R7088	NRSA63J-0R0X	MG RESISTOR	0Ω 1/16W J
R7089	NRSA63J-102X	MG RESISTOR	1kΩ 1/16W J
R7091	NRSA63J-0R0X	MG RESISTOR	0Ω 1/16W J
R7092	NRSA63J-101X	MG RESISTOR	100Ω 1/16W J
R7093	NRSA63J-101X	MG RESISTOR	100Ω 1/16W J
R7094	NRSA63J-101X	MG RESISTOR	100Ω 1/16W J
R7095	NRSA63J-0R0X	MG RESISTOR	0Ω 1/16W J
R7097	NRSA63J-0R0X	MG RESISTOR	0Ω 1/16W J
R7098	NRSA63J-0R0X	MG RESISTOR	0Ω 1/16W J
R7099	NRSA63J-0R0X	MG RESISTOR	0Ω 1/16W J
R7100	NRSA63J-0R0X	MG RESISTOR	0Ω 1/16W J
R7103	NRSA63J-0R0X	MG RESISTOR	0Ω 1/16W J
R7106	NRSA63J-0R0X	MG RESISTOR	0Ω 1/16W J
R7109	NRSA63J-0R0X	MG RESISTOR	0Ω 1/16W J
R7112	NRSA63J-0R0X	MG RESISTOR	0Ω 1/16W J
R7113	NRSA63J-0R0X	MG RESISTOR	0Ω 1/16W J
R7123	NRSA63J-0R0X	MG RESISTOR	0Ω 1/16W J
R7124	NRSA63J-0R0X	MG RESISTOR	0Ω 1/16W J
R7125	NRSA63J-0R0X	MG RESISTOR	0Ω 1/16W J
R7127	NRSA63J-0R0X	MG RESISTOR	0Ω 1/16W J
R7157	NRSA63J-0R0X	MG RESISTOR	0Ω 1/16W J
R7170	NRSA63J-0R0X	MG RESISTOR	0Ω 1/16W J
R7171	NRSA63J-0R0X	MG RESISTOR	0Ω 1/16W J
R7172	NRSA63J-0R0X	MG RESISTOR	0Ω 1/16W J
R7173	NRSA63J-0R0X	MG RESISTOR	0Ω 1/16W J
R7174	NRSA63J-473X	MG RESISTOR	47kΩ 1/16W J
R7175	NRSA63J-0R0X	MG RESISTOR	0Ω 1/16W J
R7176	NRSA63J-0R0X	MG RESISTOR	0Ω 1/16W J
R7177	NRSA63J-0R0X	MG RESISTOR	0Ω 1/16W J
R7178	NRSA63J-0R0X	MG RESISTOR	0Ω 1/16W J
R7179	NRSA63J-0R0X	MG RESISTOR	0Ω 1/16W J
R7184	NRSA63J-0R0X	MG RESISTOR	0Ω 1/16W J
R7187	NRSA63J-0R0X	MG RESISTOR	0Ω 1/16W J
R7192	NRSA63J-0R0X	MG RESISTOR	0Ω 1/16W J
R7201	NRSA63J-473X	MG RESISTOR	47kΩ 1/16W J
R7202	NRSA63J-473X	MG RESISTOR	47kΩ 1/16W J
R7203	NRSA63J-473X	MG RESISTOR	47kΩ 1/16W J
R7207	NRSA63J-101X	MG RESISTOR	100Ω 1/16W J
R7208	NRSA63J-0R0X	MG RESISTOR	0Ω 1/16W J
R7211	NRSA63J-0R0X	MG RESISTOR	0Ω 1/16W J
R7214	NRSA63J-0R0X	MG RESISTOR	0Ω 1/16W J
R7215	NRSA63J-473X	MG RESISTOR	47kΩ 1/16W J
R7216	NRSA63J-473X	MG RESISTOR	47kΩ 1/16W J
R7217	NRSA63J-473X	MG RESISTOR	47kΩ 1/16W J
R7221	NRSA63J-0R0X	MG RESISTOR	0Ω 1/16W J
R7223	NRSA63J-473X	MG RESISTOR	47kΩ 1/16W J
R7224	NRSA63J-473X	MG RESISTOR	47kΩ 1/16W J
R7225	NRSA63J-473X	MG RESISTOR	47kΩ 1/16W J
R7238	NRSA63J-0R0X	MG RESISTOR	0Ω 1/16W J
R7243	NRSA63J-0R0X	MG RESISTOR	0Ω 1/16W J
R7349	NRSA63J-103X	MG RESISTOR	10kΩ 1/16W J
R7350	NRSA63J-103X	MG RESISTOR	10kΩ 1/16W J
R7351	NRSA63J-103X	MG RESISTOR	10kΩ 1/16W J
R7370	NRSA63J-0R0X	MG RESISTOR	0Ω 1/16W J
R7501	NRSA63J-0R0X	MG RESISTOR	0Ω 1/16W J
R7502	NRSA63J-0R0X	MG RESISTOR	0Ω 1/16W J
R7504	NRSA63J-104X	MG RESISTOR	100kΩ 1/16W J
R7505	NRSA63J-103X	MG RESISTOR	10kΩ 1/16W J
R7512	NRSA63J-0R0X	MG RESISTOR	0Ω 1/16W J
R7513	NRSA63J-0R0X	MG RESISTOR	0Ω 1/16W J
R7514	NRSA63J-0R0X	MG RESISTOR	0Ω 1/16W J
R7515	NRSA63J-102X	MG RESISTOR	1kΩ 1/16W J
R7601	NRSA63J-103X	MG RESISTOR	10kΩ 1/16W J
R7602	NRSA63J-103X	MG RESISTOR	10kΩ 1/16W J
R7603	NRSA63J-0R0X	MG RESISTOR	0Ω 1/16W J
R7604	NRSA63J-0R0X	MG RESISTOR	0Ω 1/16W J
R7605	NRSA63J-471X	MG RESISTOR	470Ω 1/16W J
R7606	NRSA63J-105X	MG RESISTOR	1MΩ 1/16W J
R7607	NRSA63J-682X	MG RESISTOR	6.8kΩ 1/16W J
R7608	NRSA63J-105X	MG RESISTOR	1MΩ 1/16W J
R7611	NRSA63J-102X	MG RESISTOR	1kΩ 1/16W J
R7612	NRSA63J-471X	MG RESISTOR	470Ω 1/16W J
R7613	NRSA63J-102X	MG RESISTOR	1kΩ 1/16W J
R7614	NRSA63J-0R0X	MG RESISTOR	0Ω 1/16W J
R7615	NRSA63J-0R0X	MG RESISTOR	0Ω 1/16W J
R7616	NRSA63J-0R0X	MG RESISTOR	0Ω 1/16W J
R7618	NRSA63J-0R0X	MG RESISTOR	0Ω 1/16W J
R7619	NRSA63J-0R0X	MG RESISTOR	0Ω 1/16W J
R7620	NRSA63J-102X	MG RESISTOR	1kΩ 1/16W J
R7622	NRSA63J-0R0X	MG RESISTOR	0Ω 1/16W J
R7623	NRSA63J-0R0X	MG RESISTOR	0Ω 1/16W J
R7624	NRSA63J-0R0X	MG RESISTOR	0Ω 1/16W J
R7625	NRSA63J-0R0X	MG RESISTOR	0Ω 1/16W J
R7626	NRSA63J-0R0X	MG RESISTOR	0Ω 1/16W J
R7627	NRSA63J-0R0X	MG RESISTOR	0Ω 1/16W J
R7628	NRSA63J-333X	MG RESISTOR	33kΩ 1/16W J
R7631	NRSA63J-102X	MG RESISTOR	1kΩ 1/16W J
R7632	NRSA63J-222X	MG RESISTOR	2.2kΩ 1/16W J
R7634	NRSA63J-102X	MG RESISTOR	1kΩ 1/16W J
R7635	NRSA63J-222X	MG RESISTOR	2.2kΩ 1/16W J
R7643	NRSA63J-0R0X	MG RESISTOR	0Ω 1/16W J
R7644	NRSA63J-0R0X	MG RESISTOR	0Ω 1/16W J
R7646	NRSA63J-0R0X	MG RESISTOR	0Ω 1/16W J
R7649	NRSA63J-103X	MG RESISTOR	10kΩ 1/16W J
R7658	NRSA63J-103X	MG RESISTOR	10kΩ 1/16W J
R7659	NRSA63J-560X	MG RESISTOR	56Ω 1/16W J
R7661	NRSA63J-0R0X	MG RESISTOR	0Ω 1/16W J
R7662	NRSA63J-0R0X	MG RESISTOR	0Ω 1/16W J
R8796	NRSA63J-0R0X	MG RESISTOR	0Ω 1/16W J
R8797	NRSA63J-0R0X	MG RESISTOR	0Ω 1/16W J
R8798	NRSA63J-0R0X	MG RESISTOR	0Ω 1/16W J
R8799	NRSA63J-0R0X	MG RESISTOR	0Ω 1/16W J
R9001	NRSA63J-473X	MG RESISTOR	47kΩ 1/16W J
R9002	NRSA02J-0R0X	MG RESISTOR	0Ω 1/10W J
R9003	NRSA63D-273X	MG RESISTOR	27kΩ 1/16W D
R9004	NRSA63J-684X	MG RESISTOR	680kΩ 1/16W J
R9005	NRSA63D-103X	MG RESISTOR	10kΩ 1/16W D
R9006	NRSA63J-512X	MG RESISTOR	5.1kΩ 1/16W J
R9007	NRSA02J-0R0X	MG RESISTOR	0Ω 1/10W J
R9008	NRSA63J-0R0X	MG RESISTOR	0Ω 1/16W J
R9201	NRSA63J-473X	MG RESISTOR	47kΩ 1/16W J
R9202	NRSA02J-0R0X	MG RESISTOR	0Ω 1/10W J
R9203	NRSA63D-302X	MG RESISTOR	3kΩ 1/16W D
R9205	NRSA63D-103X	MG RESISTOR	10kΩ 1/16W D
R9206	NRSA63J-332X	MG RESISTOR	3.3kΩ 1/16W J
R9207	NRSA02J-0R0X	MG RESISTOR	0Ω 1/10W J
R9209	NRSA63J-0R0X	MG RESISTOR	0Ω 1/16W J
R9306	NCB21EK-102X	C CAPACITOR	1000pF 25V K
R9308	NRSA63J-0R0X	MG RESISTOR	0Ω 1/16W J

⚠Ref No.	Part No.	Part Name	Description Local
R9501	NRSA63J-472X	MG RESISTOR	4.7kΩ 1/16W J
R9502	NRSA63J-223X	MG RESISTOR	22kΩ 1/16W J
R9503	NRSA63J-393X	MG RESISTOR	39kΩ 1/16W J
R9504	NRSA63J-223X	MG RESISTOR	22kΩ 1/16W J
R9505	NRSA63J-103X	MG RESISTOR	10kΩ 1/16W J
R9506	NRSA63J-223X	MG RESISTOR	22kΩ 1/16W J
R9507	NRSA63J-103X	MG RESISTOR	10kΩ 1/16W J
R9508	NRSA63J-223X	MG RESISTOR	22kΩ 1/16W J
R9509	NRSA63J-103X	MG RESISTOR	10kΩ 1/16W J
R9510	NRSA63J-104X	MG RESISTOR	100kΩ 1/16W J
RA6001	NRZ0080-0R0X	NET RESISTOR	0Ω 1/16W J
RA6002	NRZ0034-0R0W	NET RESISTOR	0Ω 1/32W J x4
RA6007	NRZ0080-0R0X	NET RESISTOR	0Ω 1/16W J
RA6008	NRZ0080-0R0X	NET RESISTOR	0Ω 1/16W J
RA6009	NRZ0034-0R0W	NET RESISTOR	0Ω 1/32W J x4
RA6010	NRZ0034-0R0W	NET RESISTOR	0Ω 1/32W J x4
RA6011	NRZ0080-0R0X	NET RESISTOR	0Ω 1/16W J
RA6101	NRZ0040-220X	NET RESISTOR	22Ω 1/16W J x4
RA6102	NRZ0080-220X	NET RESISTOR	22Ω 1/16W J
RA6103	NRZ0040-220X	NET RESISTOR	22Ω 1/16W J x4
RA6104	NRZ0040-220X	NET RESISTOR	22Ω 1/16W J x4
RA6105	NRZ0080-220X	NET RESISTOR	22Ω 1/16W J
RA6106	NRZ0040-220X	NET RESISTOR	22Ω 1/16W J x4
RA6107	NRZ0080-220X	NET RESISTOR	22Ω 1/16W J
RA6108	NRZ0080-220X	NET RESISTOR	22Ω 1/16W J
RA6109	NRZ0040-470X	NET RESISTOR	47Ω 1/16W J x4
RA6110	NRZ0080-470X	NET RESISTOR	47Ω 1/16W J
RA6111	NRZ0040-470X	NET RESISTOR	47Ω 1/16W J x4
RA6112	NRZ0040-470X	NET RESISTOR	47Ω 1/16W J x4
RA6113	NRZ0080-470X	NET RESISTOR	47Ω 1/16W J
RA6114	NRZ0040-470X	NET RESISTOR	47Ω 1/16W J x4
RA6115	NRZ0080-470X	NET RESISTOR	47Ω 1/16W J
RA6116	NRZ0080-470X	NET RESISTOR	47Ω 1/16W J
RA6531	NRZ0034-0R0W	NET RESISTOR	0Ω 1/32W J x4
RA6541	NRZ0033-0R0W	NET RESISTOR	0Ω
RA6542	NRZ0080-0R0X	NET RESISTOR	0Ω 1/16W J
RA6543	NRZ0033-0R0W	NET RESISTOR	0Ω
RA6544	NRZ0080-0R0X	NET RESISTOR	0Ω 1/16W J
RA6545	NRZ0033-0R0W	NET RESISTOR	0Ω
RA6546	NRZ0080-0R0X	NET RESISTOR	0Ω 1/16W J
RA7202	NRZ0080-473X	NET RESISTOR	47kΩ
RA7203	NRZ0080-473X	NET RESISTOR	47kΩ
RA7204	NRZ0080-473X	NET RESISTOR	47kΩ
RA7205	NRZ0080-473X	NET RESISTOR	47kΩ
RA7503	NQR0271-004X	EMI FILTER	
RA7601	NRZ0034-0R0W	NET RESISTOR	0Ω 1/32W J x4
RA7602	NRZ0034-0R0W	NET RESISTOR	0Ω 1/32W J x4
RA7603	NRZ0034-0R0W	NET RESISTOR	0Ω 1/32W J x4
RA7605	NRZ0034-0R0W	NET RESISTOR	0Ω 1/32W J x4
RA7606	NRZ0034-101W	NET RESISTOR	100Ω 1/32W J x4
L6101	NRSA02J-0R0X	MG RESISTOR	0Ω 1/10W J
L6102	NQL79GM-220X	COIL	22uH M
L6103	NQL79GM-220X	COIL	22uH M
L6115	NQR0499-001X	FERRITE BEADS	
L6254	NRSA02J-0R0X	MG RESISTOR	0Ω 1/10W J
L6265	NQR0499-001X	FERRITE BEADS	
L6266	NQR0499-001X	FERRITE BEADS	
L6502	NRSA02J-0R0X	MG RESISTOR	0Ω 1/10W J
L6521	NRZ0034-0R0W	NET RESISTOR	0Ω 1/32W J x4
L6522	NRZ0034-0R0W	NET RESISTOR	0Ω 1/32W J x4
L6523	NRZ0034-0R0W	NET RESISTOR	0Ω 1/32W J x4
L6531	NQR0199-007X	FERRITE BEADS	
L6701	NQR0413-003X	FERRITE BEADS	
L6911	NQR0499-001X	FERRITE BEADS	
L6912	NQR0499-001X	FERRITE BEADS	
L6922	NQL79GM-220X	COIL	22uH M
L6924	NQL79GM-220X	COIL	22uH M
L6925	NQL79GM-220X	COIL	22uH M
L6931	NQR0499-001X	FERRITE BEADS	
L7501	NRSA63J-0R0X	MG RESISTOR	0Ω 1/16W J
L7502	NRSA63J-0R0X	MG RESISTOR	0Ω 1/16W J
L9001	NQLC8CM-150X	COIL	15uH M
L9201	NQLC8CM-150X	COIL	15uH M
L9306	NQR0351-003X	FERRITE BEADS	
CN001	QGF0508C2-50W	CONNECTOR	FFC/FPC (1-50)
CN002	QGF0508C2-40W	CONNECTOR	FFC/FPC (1-40)
J8501	NNZ0117-001	CONNECTOR	DIGITAL IN-1
J8502	NNZ0117-001	CONNECTOR	DIGITAL IN-2
K6250	NRSA02J-0R0X	MG RESISTOR	0Ω 1/10W J
K6268	NRSA02J-0R0X	MG RESISTOR	0Ω 1/10W J
K6271	NQR0499-001X	FERRITE BEADS	
K6272	NQR0499-001X	FERRITE BEADS	
K6274	NQR0499-001X	FERRITE BEADS	
K6921	NRSA02J-0R0X	MG RESISTOR	0Ω 1/10W J
K7032	NRSA02J-0R0X	MG RESISTOR	0Ω 1/10W J
K7033	NRSA02J-0R0X	MG RESISTOR	0Ω 1/10W J
K7034	NRSA02J-0R0X	MG RESISTOR	0Ω 1/10W J
K7202	NRSA63J-0R0X	MG RESISTOR	0Ω 1/16W J
K7211	NQR0499-002X	FERRITE BEADS	
K7501	NQR0413-002X	FERRITE BEADS	
K7504	NRSA63J-0R0X	MG RESISTOR	0Ω 1/16W J
K7601	NRSA02J-0R0X	MG RESISTOR	0Ω 1/10W J
LC6501	NQR0479-001X	EMI FILTER	
LC7505	NQR0483-005X	EMI FILTER	100uF 25V Z
LC9303	NQR0483-005X	EMI FILTER	100uF 25V Z
LC9305	NQR0483-005X	EMI FILTER	100uF 25V Z
LC9307	NQR0483-005X	EMI FILTER	100uF 25V Z
X6250	NAX0580-001X	CXO	27.0000MHz
X7001	NAX0669-001X	C RESONATOR	6.000MHz
X7601	NAX0613-001X	C RESONATOR	16.000MHz

ATSC TUNER MODULE P.W. BOARD ASS'Y (SSD-2204A-M2)

REFER TO PARTS LIST IN PAGE 3-18 FOR THIS P.W. BOARD.

PRINTED WIRING BOARD PARTS LIST [LT-32X887/Z]

SD CARD P.W. BOARD ASS'Y (SFL-1305A-M2)

REFER TO PARTS LIST IN PAGE 3-8 FOR THIS P.W. BOARD.

ANALOG P.W. BOARD ASS'Y (SFL-1311A-M2)

REFER TO PARTS LIST IN PAGE 3-8 FOR THIS P.W. BOARD.

OPTICAL P.W. BOARD ASS'Y (SFL-2501A-M2)

REFER TO PARTS LIST IN PAGE 3-11 FOR THIS P.W. BOARD.

D-AMP P.W. BOARD ASS'Y (SFL-6301A-M2)

REFER TO PARTS LIST IN PAGE 3-11 FOR THIS P.W. BOARD.

SW P.W. BOARD ASS'Y (SFL-7207A-M2)

REFER TO PARTS LIST IN PAGE 3-12 FOR THIS P.W. BOARD.

LED P.W. BOARD ASS'Y (SFL-8901A-M2)

REFER TO PARTS LIST IN PAGE 3-12 FOR THIS P.W. BOARD.

POWER P.W. BOARD ASS'Y (SFL-9048A-M2)

REFER TO PARTS LIST IN PAGE 3-12 FOR THIS P.W. BOARD.

DC-DC P.W. BOARD ASS'Y (SFL-9154A-M2)

REFER TO PARTS LIST IN PAGE 3-13 FOR THIS P.W. BOARD.

DIGITAL P.W. BOARD ASS'Y (SFL0D173A-M2)

⚠Ref No.	Part No.	Part Name	Description	Local
IC6001	JCC5068	IC		
IC6002	SN74LVC1G08V-X	IC		
IC6101	EDD1232AAFA-6B	IC		
IC6102	LP2996MR-X	IC		
IC6250	UPC5702GS-027-X	IC		
IC6251	R1170H331B-X	IC		
IC6502	THC63LVDM83R-W	IC		
IC6724	S-80928CLNB-G-W	IC		
IC6901	R1141Q331B-X	IC		
IC7033	CD74HC4094PW-X	IC		
IC7036	ADC081S021CIS-X	IC		
IC7201	39VF800A7IEKD74	IC(MICRO C ROM)		
IC7203	M12L16161A-7TG	IC		
IC7204	S-80928CLNB-G-W	IC		
IC7601	M306V7MG-153FP	IC(MCU)		
IC7602	ATF16-32X787Z	IC(DIGITAL)	(SERVICE)	
IC7603	SN74AHCT1G08V-X	IC		
IC7604	SN74LVC1G04V-X	IC		
IC7605	MM1673XN-X	IC		
IC7606	MM1673XN-X	IC		
IC9001	MP2263DN-C053-X	IC		
IC9101	MM1662FT-X	IC		
IC9201	MP2263DN-C053-X	IC		
IC9301	MM1701CH-X	IC		
Q6201	2SA1530A/QR/-X	TRANSISTOR		
Q6202	2SA1530A/QR/-X	TRANSISTOR		
Q6203	2SA1022/BC/-X	TRANSISTOR		
Q6204	2SA1022/BC/-X	TRANSISTOR		
Q6205	2SA1022/BC/-X	TRANSISTOR		
Q6206	2SA1022/BC/-X	TRANSISTOR		
Q6207	2SC3837K/NP/-X	TRANSISTOR		
Q6208	2SC3837K/NP/-X	TRANSISTOR		
Q6209	2SC3837K/NP/-X	TRANSISTOR		
Q6210	2SC3837K/NP/-X	TRANSISTOR		
Q6211	2SC3837K/NP/-X	TRANSISTOR		
Q6212	2SC3837K/NP/-X	TRANSISTOR		
Q6213	2SC3837K/NP/-X	TRANSISTOR		
Q6214	2SC3837K/NP/-X	TRANSISTOR		
Q6250	2SC3928A/QR/-X	TRANSISTOR		
Q6251	2SC3928A/QR/-X	TRANSISTOR		
Q6501	2SC3928A/QR/-X	TRANSISTOR		
Q6502	2SC3928A/QR/-X	TRANSISTOR		
Q7032	RT1P441C-X	DIGI TRANSISTOR		
Q7033	RT1P441C-X	DIGI TRANSISTOR		
Q7034	RT1P441C-X	DIGI TRANSISTOR		
Q7501	RT1N441C-X	TRANSISTOR		
Q9501	RT1N441C-X	TRANSISTOR		
Q9502	2SC3928A/QR/-X	TRANSISTOR		
Q9503	2SC3928A/QR/-X	TRANSISTOR		
D6503	1SS355W-X	DIODE		
D7502	1SS355W-X	DIODE		
D9001	EC30HA03L-X	SB DIODE		
D9002	EC30HA03L-X	SB DIODE		
D9003	PTZ3.9B-X	Z DIODE		
D9201	EC30HA03L-X	SB DIODE		
D9202	EC30HA03L-X	SB DIODE		
D9203	PTZ3.9B-X	Z DIODE		
D9204	1SS355W-X	DIODE		
D9501	1SS355W-X	DIODE		
D9502	1SS355W-X	DIODE		
C6002	NCB31CK-104X	C CAPACITOR	0.1uF 16V K	
C6101	NCB30JK-225X	C CAPACITOR	2.2uF 6.3V K	
C6103	NCB31AK-474X	C CAPACITOR	0.47uF 10V K	
C6107	NCB31AK-474X	C CAPACITOR	0.47uF 10V K	
C6109	NCB31CK-104X	C CAPACITOR	0.1uF 16V K	
C6111	NCB31CK-104X	C CAPACITOR	0.1uF 16V K	
C6112	NCB31CK-104X	C CAPACITOR	0.1uF 16V K	
C6113	NCB31AK-474X	C CAPACITOR	0.47uF 10V K	
C6114	NCB31CK-104X	C CAPACITOR	0.1uF 16V K	
C6116	NCB31AK-474X	C CAPACITOR	0.47uF 10V K	
C6117	NCB30JK-225X	C CAPACITOR	2.2uF 6.3V K	
C6118	NCB31AK-474X	C CAPACITOR	0.47uF 10V K	
C6119	NCB31AK-474X	C CAPACITOR	0.47uF 10V K	
C6121	NCB31AK-474X	C CAPACITOR	0.47uF 10V K	
C6122	NEHL0JM-107X	E CAPACITOR	100uF 6.3V M	
C6123	NCB31CK-104X	C CAPACITOR	0.1uF 16V K	
C6124	NEHL0JM-107X	E CAPACITOR	100uF 6.3V M	
C6125	NCB31CK-104X	C CAPACITOR	0.1uF 16V K	
C6126	NCB30JK-225X	C CAPACITOR	2.2uF 6.3V K	
C6128	NCB30JK-225X	C CAPACITOR	2.2uF 6.3V K	
C6130	NCB30JK-225X	C CAPACITOR	2.2uF 6.3V K	
C6132	NEHL1EM-226X	E CAPACITOR	22uF 25V M	
C6133	NCB31CK-154X	C CAPACITOR	0.15uF 16V K	
C6134	NCB11AK-106X	C CAPACITOR	10uF 10V K	
C6135	NCB31CK-104X	C CAPACITOR	0.1uF 16V K	
C6139	NCB31CK-104X	C CAPACITOR	0.1uF 16V K	
C6205	NCB31CK-104X	C CAPACITOR	0.1uF 16V K	
C6211	NCB31CK-104X	C CAPACITOR	0.1uF 16V K	
C6217	NCB31CK-104X	C CAPACITOR	0.1uF 16V K	
C6218	NCB31CK-104X	C CAPACITOR	0.1uF 16V K	
C6219	NCB31CK-104X	C CAPACITOR	0.1uF 16V K	
C6220	NCB31CK-104X	C CAPACITOR	0.1uF 16V K	
C6227	NCB31CK-104X	C CAPACITOR	0.1uF 16V K	
C6228	NCB31CK-104X	C CAPACITOR	0.1uF 16V K	
C6229	NCB31CK-104X	C CAPACITOR	0.1uF 16V K	
C6236	NCB31CK-104X	C CAPACITOR	0.1uF 16V K	
C6237	NCB31CK-104X	C CAPACITOR	0.1uF 16V K	
C6238	NCB31CK-104X	C CAPACITOR	0.1uF 16V K	
C6239	NCB31CK-104X	C CAPACITOR	0.1uF 16V K	
C6240	NCB31CK-104X	C CAPACITOR	0.1uF 16V K	
C6241	NCB11AK-106X	C CAPACITOR	10uF 10V K	
C6242	NCB31AK-105X	C CAPACITOR	1uF 10V K	
C6243	NCB11AK-106X	C CAPACITOR	10uF 10V K	
C6244	NCB31AK-105X	C CAPACITOR	1uF 10V K	
C6245	NCB11AK-106X	C CAPACITOR	10uF 10V K	
C6246	NCB31AK-105X	C CAPACITOR	1uF 10V K	
C6247	NCB11AK-106X	C CAPACITOR	10uF 10V K	
C6248	NCB31AK-105X	C CAPACITOR	1uF 10V K	
C6249	NCB31AK-105X	C CAPACITOR	1uF 10V K	
C6250	NCB11AK-106X	C CAPACITOR	10uF 10V K	
C6251	NCB31CK-104X	C CAPACITOR	0.1uF 16V K	
C6252	NCB11AK-106X	C CAPACITOR	10uF 10V K	
C6253	NCB11AK-106X	C CAPACITOR	10uF 10V K	
C6254	NCB11AK-106X	C CAPACITOR	10uF 10V K	
C6255	NCB11AK-106X	C CAPACITOR	10uF 10V K	
C6260	NCB21AK-225X	C CAPACITOR	2.2uF 10V K	
C6261	NCB21AK-225X	C CAPACITOR	2.2uF 10V K	
C6262	NCB21AK-225X	C CAPACITOR	2.2uF 10V K	
C6263	NCB21AK-225X	C CAPACITOR	2.2uF 10V K	
C6268	NCB31CK-104X	C CAPACITOR	0.1uF 16V K	

⚠Ref No.	Part No.	Part Name	Description Local
C6270	NCB31CK-104X	C CAPACITOR	0.1uF 16V K
C6271	NCB31CK-104X	C CAPACITOR	0.1uF 16V K
C6272	NCB31CK-104X	C CAPACITOR	0.1uF 16V K
C6273	NCB31CK-104X	C CAPACITOR	0.1uF 16V K
C6274	NCB31CK-104X	C CAPACITOR	0.1uF 16V K
C6276	NCB31CK-104X	C CAPACITOR	0.1uF 16V K
C6277	NCB31CK-104X	C CAPACITOR	0.1uF 16V K
C6278	NCB31CK-104X	C CAPACITOR	0.1uF 16V K
C6279	NCB31CK-104X	C CAPACITOR	0.1uF 16V K
C6280	NCB31CK-104X	C CAPACITOR	0.1uF 16V K
C6282	NCB31CK-104X	C CAPACITOR	0.1uF 16V K
C6283	NCB31CK-104X	C CAPACITOR	0.1uF 16V K
C6284	NCB31CK-104X	C CAPACITOR	0.1uF 16V K
C6285	NCB31CK-104X	C CAPACITOR	0.1uF 16V K
C6286	NCB31CK-104X	C CAPACITOR	0.1uF 16V K
C6288	NCB31CK-104X	C CAPACITOR	0.1uF 16V K
C6289	NCB31CK-104X	C CAPACITOR	0.1uF 16V K
C6291	NCB31CK-104X	C CAPACITOR	0.1uF 16V K
C6293	NCB31CK-104X	C CAPACITOR	0.1uF 16V K
C6294	NBZ0007-107X	SP E CAPACITOR	100uF 4V M
C6295	NBZ0007-107X	SP E CAPACITOR	100uF 4V M
C6296	NCB11AK-106X	C CAPACITOR	10uF 10V K
C6297	NCB11AK-106X	C CAPACITOR	10uF 10V K
C6299	NCB31CK-104X	C CAPACITOR	0.1uF 16V K
C6300	NCB31CK-104X	C CAPACITOR	0.1uF 16V K
C6301	NCB31CK-104X	C CAPACITOR	0.1uF 16V K
C6520	NCB11AK-106X	C CAPACITOR	10uF 10V K
C6521	NCB31CK-104X	C CAPACITOR	0.1uF 16V K
C6522	NCB31CK-104X	C CAPACITOR	0.1uF 16V K
C6523	NCB31CK-104X	C CAPACITOR	0.1uF 16V K
C6524	NCB31CK-104X	C CAPACITOR	0.1uF 16V K
C6525	NCB31CK-104X	C CAPACITOR	0.1uF 16V K
C6531	NCB31CK-104X	C CAPACITOR	0.1uF 16V K
C6532	NCB31CK-104X	C CAPACITOR	0.1uF 16V K
C6533	NRSA63J-102X	MG RESISTOR	1kΩ 1/16W J
C6573	NCB21CK-105X	C CAPACITOR	1uF 16V K
C6602	NCB31CK-104X	C CAPACITOR	0.1uF 16V K
C6603	NCB31CK-104X	C CAPACITOR	0.1uF 16V K
C6610	NCF31CZ-104X	C CAPACITOR	0.1uF 16V Z
C6611	NCF31CZ-104X	C CAPACITOR	0.1uF 16V Z
C6612	NCF31CZ-104X	C CAPACITOR	0.1uF 16V Z
C6613	NCF31CZ-104X	C CAPACITOR	0.1uF 16V Z
C6614	NCF31CZ-104X	C CAPACITOR	0.1uF 16V Z
C6615	NCF31CZ-104X	C CAPACITOR	0.1uF 16V Z
C6616	NCF31CZ-104X	C CAPACITOR	0.1uF 16V Z
C6617	NCF31CZ-104X	C CAPACITOR	0.1uF 16V Z
C6618	NCF31CZ-104X	C CAPACITOR	0.1uF 16V Z
C6619	NCF31CZ-104X	C CAPACITOR	0.1uF 16V Z
C6620	NCF31CZ-104X	C CAPACITOR	0.1uF 16V Z
C6621	NCF31CZ-104X	C CAPACITOR	0.1uF 16V Z
C6622	NCF31CZ-104X	C CAPACITOR	0.1uF 16V Z
C6623	NCF31CZ-104X	C CAPACITOR	0.1uF 16V Z
C6624	NCF31CZ-104X	C CAPACITOR	0.1uF 16V Z
C6625	NCF31CZ-104X	C CAPACITOR	0.1uF 16V Z
C6626	NCF31CZ-104X	C CAPACITOR	0.1uF 16V Z
C6627	NCF31CZ-104X	C CAPACITOR	0.1uF 16V Z
C6628	NCF31CZ-104X	C CAPACITOR	0.1uF 16V Z
C6629	NCF31CZ-104X	C CAPACITOR	0.1uF 16V Z
C6630	NCF31CZ-104X	C CAPACITOR	0.1uF 16V Z
C6631	NCF31CZ-104X	C CAPACITOR	0.1uF 16V Z
C6632	NCF31CZ-104X	C CAPACITOR	0.1uF 16V Z
C6633	NCF31CZ-104X	C CAPACITOR	0.1uF 16V Z
C6634	NCF31CZ-104X	C CAPACITOR	0.1uF 16V Z
C6635	NCF31CZ-104X	C CAPACITOR	0.1uF 16V Z
C6636	NCF31CZ-104X	C CAPACITOR	0.1uF 16V Z
C6637	NCF31CZ-104X	C CAPACITOR	0.1uF 16V Z
C6638	NCF31CZ-104X	C CAPACITOR	0.1uF 16V Z
C6639	NCF31CZ-104X	C CAPACITOR	0.1uF 16V Z
C6640	NCF31CZ-104X	C CAPACITOR	0.1uF 16V Z
C6641	NCF31CZ-104X	C CAPACITOR	0.1uF 16V Z
C6642	NCF31CZ-104X	C CAPACITOR	0.1uF 16V Z
C6643	NCF31CZ-104X	C CAPACITOR	0.1uF 16V Z
C6644	NCF31CZ-104X	C CAPACITOR	0.1uF 16V Z
C6645	NCF31CZ-104X	C CAPACITOR	0.1uF 16V Z
C6656	NCF31CZ-104X	C CAPACITOR	0.1uF 16V Z
C6657	NCF31CZ-104X	C CAPACITOR	0.1uF 16V Z
C6658	NCF31CZ-104X	C CAPACITOR	0.1uF 16V Z
C6659	NCF31CZ-104X	C CAPACITOR	0.1uF 16V Z
C6660	NCF31CZ-104X	C CAPACITOR	0.1uF 16V Z
C6661	NCF31CZ-104X	C CAPACITOR	0.1uF 16V Z
C6677	NCF31CZ-104X	C CAPACITOR	0.1uF 16V Z
C6678	NCF31CZ-104X	C CAPACITOR	0.1uF 16V Z
C6679	NCF31CZ-104X	C CAPACITOR	0.1uF 16V Z
C6680	NCF31CZ-104X	C CAPACITOR	0.1uF 16V Z
C6681	NCF31CZ-104X	C CAPACITOR	0.1uF 16V Z
C6682	NCF31CZ-104X	C CAPACITOR	0.1uF 16V Z
C6683	NCF31CZ-104X	C CAPACITOR	0.1uF 16V Z
C6684	NCF31CZ-104X	C CAPACITOR	0.1uF 16V Z
C6685	NCF31CZ-104X	C CAPACITOR	0.1uF 16V Z
C6686	NCF31CZ-104X	C CAPACITOR	0.1uF 16V Z
C6687	NCF31CZ-104X	C CAPACITOR	0.1uF 16V Z
C6688	NCF31CZ-104X	C CAPACITOR	0.1uF 16V Z
C6689	NCF31CZ-104X	C CAPACITOR	0.1uF 16V Z
C6690	NCF31CZ-104X	C CAPACITOR	0.1uF 16V Z
C6691	NCF31CZ-104X	C CAPACITOR	0.1uF 16V Z
C6692	NCF31CZ-104X	C CAPACITOR	0.1uF 16V Z
C6693	NCF31CZ-104X	C CAPACITOR	0.1uF 16V Z
C6694	NCF31CZ-104X	C CAPACITOR	0.1uF 16V Z
C6695	NCF31CZ-104X	C CAPACITOR	0.1uF 16V Z
C6696	NCF31CZ-104X	C CAPACITOR	0.1uF 16V Z
C6697	NCF31CZ-104X	C CAPACITOR	0.1uF 16V Z
C6698	NCF31CZ-104X	C CAPACITOR	0.1uF 16V Z
C6699	NCF31CZ-104X	C CAPACITOR	0.1uF 16V Z
C6701	NCF11CZ-475X	C CAPACITOR	4.7uF 16V Z
C6723	NCB31HK-222X	C CAPACITOR	2200pF 50V K
C6724	NCB31HK-103X	C CAPACITOR	0.01uF 50V K
C6901	NBZ0007-107X	SP E CAPACITOR	100uF 4V M
C6902	NCB31CK-104X	C CAPACITOR	0.1uF 16V K
C6903	NCB31CK-104X	C CAPACITOR	0.1uF 16V K
C6904	NCB31CK-104X	C CAPACITOR	0.1uF 16V K
C6905	NCB31CK-104X	C CAPACITOR	0.1uF 16V K
C6906	NCB31CK-104X	C CAPACITOR	0.1uF 16V K
C6907	NCB31CK-104X	C CAPACITOR	0.1uF 16V K
C6908	NCB31CK-104X	C CAPACITOR	0.1uF 16V K
C6909	NCB31CK-104X	C CAPACITOR	0.1uF 16V K
C6910	NCB31CK-104X	C CAPACITOR	0.1uF 16V K
C6911	NCB31CK-104X	C CAPACITOR	0.1uF 16V K
C6912	NCB11AK-106X	C CAPACITOR	10uF 10V K
C6913	NCB31CK-104X	C CAPACITOR	0.1uF 16V K
C6914	NCB31CK-104X	C CAPACITOR	0.1uF 16V K
C6915	NCB31CK-104X	C CAPACITOR	0.1uF 16V K
C6916	NCB31CK-104X	C CAPACITOR	0.1uF 16V K
C6917	NCB31CK-104X	C CAPACITOR	0.1uF 16V K
C6918	NCB31CK-104X	C CAPACITOR	0.1uF 16V K
C6919	NCB31CK-104X	C CAPACITOR	0.1uF 16V K
C6921	NCB11AK-106X	C CAPACITOR	10uF 10V K
C6922	NCB31CK-104X	C CAPACITOR	0.1uF 16V K
C6923	NCB11AK-106X	C CAPACITOR	10uF 10V K
C6924	NCB31CK-104X	C CAPACITOR	0.1uF 16V K
C6925	NCB11AK-106X	C CAPACITOR	10uF 10V K
C6926	NCB31CK-104X	C CAPACITOR	0.1uF 16V K
C6927	NCB11AK-106X	C CAPACITOR	10uF 10V K
C6928	NCB31CK-104X	C CAPACITOR	0.1uF 16V K
C6929	NCB31AK-105X	C CAPACITOR	1uF 10V K
C7030	NCB31HK-103X	C CAPACITOR	0.01uF 50V K
C7031	NCB31HK-103X	C CAPACITOR	0.01uF 50V K
C7034	NCB31HK-153X	C CAPACITOR	0.015uF 50V K
C7039	NCB31HK-102X	C CAPACITOR	1000pF 50V K
C7040	NCB11AK-106X	C CAPACITOR	10uF 10V K
C7044	NCB31CK-104X	C CAPACITOR	0.1uF 16V K
C7051	NCB31CK-104X	C CAPACITOR	0.1uF 16V K
C7052	NCB31CK-104X	C CAPACITOR	0.1uF 16V K
C7053	NCB31CK-104X	C CAPACITOR	0.1uF 16V K
C7054	NCB31CK-104X	C CAPACITOR	0.1uF 16V K
C7055	NCB31CK-104X	C CAPACITOR	0.1uF 16V K
C7056	NCB31CK-104X	C CAPACITOR	0.1uF 16V K
C7057	NCB31CK-104X	C CAPACITOR	0.1uF 16V K
C7058	NCB31CK-104X	C CAPACITOR	0.1uF 16V K
C7059	NCB31CK-104X	C CAPACITOR	0.1uF 16V K
C7060	NCB31CK-104X	C CAPACITOR	0.1uF 16V K
C7061	NCB31CK-104X	C CAPACITOR	0.1uF 16V K
C7062	NCB31CK-104X	C CAPACITOR	0.1uF 16V K
C7063	NCB31CK-104X	C CAPACITOR	0.1uF 16V K
C7064	NCB31CK-104X	C CAPACITOR	0.1uF 16V K
C7065	NCB31CK-104X	C CAPACITOR	0.1uF 16V K
C7066	NCB31CK-104X	C CAPACITOR	0.1uF 16V K
C7067	NCB31CK-104X	C CAPACITOR	0.1uF 16V K
C7068	NCB31CK-104X	C CAPACITOR	0.1uF 16V K
C7073	NCB31CK-104X	C CAPACITOR	0.1uF 16V K
C7202	NCB31CK-104X	C CAPACITOR	0.1uF 16V K
C7203	NCB31CK-104X	C CAPACITOR	0.1uF 16V K
C7204	NCB31CK-104X	C CAPACITOR	0.1uF 16V K
C7205	NCB31CK-104X	C CAPACITOR	0.1uF 16V K
C7206	NCB31CK-104X	C CAPACITOR	0.1uF 16V K
C7207	NCB31CK-104X	C CAPACITOR	0.1uF 16V K
C7208	NCB31CK-104X	C CAPACITOR	0.1uF 16V K
C7209	NCB31CK-104X	C CAPACITOR	0.1uF 16V K
C7211	NCB31HK-102X	C CAPACITOR	1000pF 50V K
C7215	NDC31HJ-330X	C CAPACITOR	33pF 50V J
C7501	NCF31CZ-104X	C CAPACITOR	0.1uF 16V Z
C7506	NCB31HK-103X	C CAPACITOR	0.01uF 50V K
C7507	NCB31HK-103X	C CAPACITOR	0.01uF 50V K
C7508	NCB31CK-104X	C CAPACITOR	0.1uF 16V K
C7510	NCB31HK-103X	C CAPACITOR	0.01uF 50V K
C7514	NCB31HK-103X	C CAPACITOR	0.01uF 50V K
C7515	NCB31HK-103X	C CAPACITOR	0.01uF 50V K
C7517	NCB31HK-103X	C CAPACITOR	0.01uF 50V K
C7601	NCB11CK-105X	C CAPACITOR	1uF 16V K
C7602	NCB31CK-104X	C CAPACITOR	0.1uF 16V K
C7603	NCB31CK-104X	C CAPACITOR	0.1uF 16V K

⚠Ref No.	Part No.	Part Name	Description Local
C7604	NCB31HK-102X	C CAPACITOR	1000pF 50V K
C7605	NCB31HK-221X	C CAPACITOR	220pF 50V K
C7606	NCB21AK-225X	C CAPACITOR	2.2uF 10V K
C7607	NCB31HK-681X	C CAPACITOR	680pF 50V K
C7608	NCB31CK-104X	C CAPACITOR	0.1uF 16V K
C7609	NCB31HK-681X	C CAPACITOR	680pF 50V K
C7610	NDC31HJ-102X	C CAPACITOR	1000pF 50V J
C7611	NDC31HJ-221X	C CAPACITOR	220pF 50V J
C7612	NCB21AK-225X	C CAPACITOR	2.2uF 10V K
C7615	NCB31CK-104X	C CAPACITOR	0.1uF 16V K
C7616	NCB31CK-104X	C CAPACITOR	0.1uF 16V K
C7617	NCB31CK-104X	C CAPACITOR	0.1uF 16V K
C7618	NCF11CZ-475X	C CAPACITOR	4.7uF 16V Z
C7619	NCB11AK-106X	C CAPACITOR	10uF 10V K
C7620	NCF11CZ-475X	C CAPACITOR	4.7uF 16V Z
C7621	NCB11AK-106X	C CAPACITOR	10uF 10V K
C7631	NCB31AK-224X	C CAPACITOR	0.22uF 10V K
C7632	NCB31AK-224X	C CAPACITOR	0.22uF 10V K
C7633	NDC31HJ-151X	C CAPACITOR	150pF 50V J
C9001	NDC31HJ-102X	C CAPACITOR	1000pF 50V J
C9002	NCJ41EK-106X-U	C CAPACITOR	10mF 25V K
C9003	NCB31EK-104X	C CAPACITOR	0.1uF 25V K
C9004	NCB31HK-103X	C CAPACITOR	0.01uF 50V K
C9005	NCJ41CK-226X-U	C CAPACITOR	22mF 16V K
C9006	NDC31HJ-120X	C CAPACITOR	12pF 50V J
C9007	NCB31HK-103X	C CAPACITOR	0.01uF 50V K
C9010	NCJ41CK-226X-U	C CAPACITOR	22mF 16V K
C9101	NCB11CK-475X	C CAPACITOR	4.7uF 16V K
C9103	NCB11CK-225X	C CAPACITOR	2.2uF 16V K
C9201	NDC31HJ-102X	C CAPACITOR	1000pF 50V J
C9202	NCJ41EK-106X-U	C CAPACITOR	10mF 25V K
C9204	NCB31HK-103X	C CAPACITOR	0.01uF 50V K
C9205	NCJ41CK-226X-U	C CAPACITOR	22mF 16V K
C9206	NDC31HJ-120X	C CAPACITOR	12pF 50V J
C9207	NCB31HK-153X	C CAPACITOR	0.015uF 50V K
C9208	NCJ41CK-226X-U	C CAPACITOR	22mF 16V K
C9209	NCB31HK-102X	C CAPACITOR	1000pF 50V K
C9211	NCB31HK-473X	C CAPACITOR	0.047uF 50V K
C9302	NCB11CK-475X	C CAPACITOR	4.7uF 16V K
C9303	NCB31HK-103X	C CAPACITOR	0.01uF 50V K
C9304	NCB11CK-475X	C CAPACITOR	4.7uF 16V K
C9501	NCB31CK-105X	C CAPACITOR	1uF 16V K
C9502	NCB31CK-105X	C CAPACITOR	1uF 16V K
R6002	NRSA63J-0R0X	MG RESISTOR	0Ω 1/16W J
R6003	NRSA63J-0R0X	MG RESISTOR	0Ω 1/16W J
R6006	NRSA63J-0R0X	MG RESISTOR	0Ω 1/16W J
R6008	NRSA63J-0R0X	MG RESISTOR	0Ω 1/16W J
R6009	NRSA63J-220X	MG RESISTOR	22Ω 1/16W J
R6014	NRSA63J-0R0X	MG RESISTOR	0Ω 1/16W J
R6017	NRSA63J-0R0X	MG RESISTOR	0Ω 1/16W J
R6018	NRSA63J-0R0X	MG RESISTOR	0Ω 1/16W J
R6019	NRSA63J-0R0X	MG RESISTOR	0Ω 1/16W J
R6020	NRSA63J-0R0X	MG RESISTOR	0Ω 1/16W J
R6073	NRSA63J-0R0X	MG RESISTOR	0Ω 1/16W J
R6074	NRSA63J-0R0X	MG RESISTOR	0Ω 1/16W J
R6075	NRSA63J-0R0X	MG RESISTOR	0Ω 1/16W J
R6080	NRSA63J-0R0X	MG RESISTOR	0Ω 1/16W J
R6101	NRSA63J-220X	MG RESISTOR	22Ω 1/16W J
R6102	NRSA63J-220X	MG RESISTOR	22Ω 1/16W J
R6103	NRSA63J-220X	MG RESISTOR	22Ω 1/16W J
R6104	NRSA63J-220X	MG RESISTOR	22Ω 1/16W J
R6105	NRSA63J-220X	MG RESISTOR	22Ω 1/16W J
R6106	NRSA63J-220X	MG RESISTOR	22Ω 1/16W J
R6107	NRSA63J-100X	MG RESISTOR	10Ω 1/16W J
R6108	NRSA63J-100X	MG RESISTOR	10Ω 1/16W J
R6109	NRSA63J-220X	MG RESISTOR	22Ω 1/16W J
R6110	NRSA63J-220X	MG RESISTOR	22Ω 1/16W J
R6111	NRSA63J-220X	MG RESISTOR	22Ω 1/16W J
R6112	NRSA63J-470X	MG RESISTOR	47Ω 1/16W J
R6113	NRSA63J-470X	MG RESISTOR	47Ω 1/16W J
R6114	NRSA63J-470X	MG RESISTOR	47Ω 1/16W J
R6115	NRSA63J-470X	MG RESISTOR	47Ω 1/16W J
R6116	NRSA63J-470X	MG RESISTOR	47Ω 1/16W J
R6117	NRSA63J-470X	MG RESISTOR	47Ω 1/16W J
R6118	NRSA63J-470X	MG RESISTOR	47Ω 1/16W J
R6119	NRSA63J-470X	MG RESISTOR	47Ω 1/16W J
R6120	NRSA63J-470X	MG RESISTOR	47Ω 1/16W J
R6121	NRSA63J-470X	MG RESISTOR	47Ω 1/16W J
R6122	NRSA63J-470X	MG RESISTOR	47Ω 1/16W J
R6127	NRSA63J-1R5X	MG RESISTOR	1.5Ω 1/16W J
R6141	NRSA63J-0R0X	MG RESISTOR	0Ω 1/16W J
R6142	NRSA63J-0R0X	MG RESISTOR	0Ω 1/16W J
R6201	NRSA63J-0R0X	MG RESISTOR	0Ω 1/16W J
R6202	NRSA63J-0R0X	MG RESISTOR	0Ω 1/16W J
R6203	NRSA63J-0R0X	MG RESISTOR	0Ω 1/16W J
R6204	NRSA63J-0R0X	MG RESISTOR	0Ω 1/16W J
R6205	NRSA63J-332X	MG RESISTOR	3.3kΩ 1/16W J
R6207	NRSA63J-0R0X	MG RESISTOR	0Ω 1/16W J
R6209	NRSA63J-0R0X	MG RESISTOR	0Ω 1/16W J

⚠Ref No.	Part No.	Part Name	Description Local
R6214	NRSA63J-0R0X	MG RESISTOR	0Ω 1/16W J
R6215	NRSA63J-0R0X	MG RESISTOR	0Ω 1/16W J
R6216	NRSA63J-0R0X	MG RESISTOR	0Ω 1/16W J
R6217	NRSA63J-0R0X	MG RESISTOR	0Ω 1/16W J
R6220	NRSA63J-682X	MG RESISTOR	6.8kΩ 1/16W J
R6227	NRSA63J-391X	MG RESISTOR	390Ω 1/16W J
R6228	NRSA63J-332X	MG RESISTOR	3.3kΩ 1/16W J
R6229	NRSA63J-682X	MG RESISTOR	6.8kΩ 1/16W J
R6230	NRSA63J-0R0X	MG RESISTOR	0Ω 1/16W J
R6231	NRSA63J-0R0X	MG RESISTOR	0Ω 1/16W J
R6232	NRSA63J-0R0X	MG RESISTOR	0Ω 1/16W J
R6233	NRSA63J-0R0X	MG RESISTOR	0Ω 1/16W J
R6234	NRSA63J-391X	MG RESISTOR	390Ω 1/16W J
R6235	NRSA63J-101X	MG RESISTOR	100Ω 1/16W J
R6236	NRSA63J-331X	MG RESISTOR	330Ω 1/16W J
R6237	NRSA63J-332X	MG RESISTOR	3.3kΩ 1/16W J
R6238	NRSA63J-101X	MG RESISTOR	100Ω 1/16W J
R6239	NRSA63J-331X	MG RESISTOR	330Ω 1/16W J
R6240	NRSA63J-682X	MG RESISTOR	6.8kΩ 1/16W J
R6241	NRSA63J-101X	MG RESISTOR	100Ω 1/16W J
R6242	NRSA63J-331X	MG RESISTOR	330Ω 1/16W J
R6243	NRSA63J-102X	MG RESISTOR	1kΩ 1/16W J
R6244	NRSA63J-101X	MG RESISTOR	100Ω 1/16W J
R6245	NRSA63J-331X	MG RESISTOR	330Ω 1/16W J
R6246	NRSA63J-332X	MG RESISTOR	3.3kΩ 1/16W J
R6247	NRSA63J-682X	MG RESISTOR	6.8kΩ 1/16W J
R6248	NRSA63J-473X	MG RESISTOR	47kΩ 1/16W J
R6249	NRSA63J-333X	MG RESISTOR	33kΩ 1/16W J
R6251	NRSA63J-0R0X	MG RESISTOR	0Ω 1/16W J
R6252	NRSA63J-0R0X	MG RESISTOR	0Ω 1/16W J
R6253	NRSA63J-222X	MG RESISTOR	2.2kΩ 1/16W J
R6254	NRSA63J-151X	MG RESISTOR	150Ω 1/16W J
R6255	NRSA63J-472X	MG RESISTOR	4.7kΩ 1/16W J
R6256	NRSA63J-0R0X	MG RESISTOR	0Ω 1/16W J
R6257	NRSA63J-222X	MG RESISTOR	2.2kΩ 1/16W J
R6258	NRSA63J-151X	MG RESISTOR	150Ω 1/16W J
R6259	NRSA63J-472X	MG RESISTOR	4.7kΩ 1/16W J
R6260	NRSA63J-0R0X	MG RESISTOR	0Ω 1/16W J
R6261	NRSA63J-222X	MG RESISTOR	2.2kΩ 1/16W J
R6262	NRSA63J-151X	MG RESISTOR	150Ω 1/16W J
R6263	NRSA63J-472X	MG RESISTOR	4.7kΩ 1/16W J
R6264	NRSA63J-0R0X	MG RESISTOR	0Ω 1/16W J
R6265	NRSA63J-103X	MG RESISTOR	10kΩ 1/16W J
R6266	NRSA63J-221X	MG RESISTOR	220Ω 1/16W J
R6267	NRSA63J-472X	MG RESISTOR	4.7kΩ 1/16W J
R6268	NRSA63D-242X	MG RESISTOR	2.4kΩ 1/16W D
R6269	NRSA63D-242X	MG RESISTOR	2.4kΩ 1/16W D
R6270	NRSA63D-242X	MG RESISTOR	2.4kΩ 1/16W D
R6271	NRSA63D-242X	MG RESISTOR	2.4kΩ 1/16W D
R6273	NRSA63J-0R0X	MG RESISTOR	0Ω 1/16W J
R6274	NRSA63J-220X	MG RESISTOR	22Ω 1/16W J
R6275	NRSA63J-0R0X	MG RESISTOR	0Ω 1/16W J
R6276	NRSA63J-0R0X	MG RESISTOR	0Ω 1/16W J
R6277	NRSA63J-391X	MG RESISTOR	390Ω 1/16W J
R6279	NRSA63J-0R0X	MG RESISTOR	0Ω 1/16W J
R6280	NRSA63J-331X	MG RESISTOR	330Ω 1/16W J
R6281	NRSA63J-101X	MG RESISTOR	100Ω 1/16W J
R6282	NRSA63J-331X	MG RESISTOR	330Ω 1/16W J
R6283	NRSA63J-101X	MG RESISTOR	100Ω 1/16W J
R6284	NRSA63J-0R0X	MG RESISTOR	0Ω 1/16W J
R6285	NRSA63J-0R0X	MG RESISTOR	0Ω 1/16W J
R6286	NRSA63J-391X	MG RESISTOR	390Ω 1/16W J
R6287	NRSA63J-391X	MG RESISTOR	390Ω 1/16W J
R6288	NRSA63J-391X	MG RESISTOR	390Ω 1/16W J
R6289	NRSA63J-102X	MG RESISTOR	1kΩ 1/16W J
R6290	NRSA63J-0R0X	MG RESISTOR	0Ω 1/16W J
R6291	NRSA63J-473X	MG RESISTOR	47kΩ 1/16W J
R6292	NRSA63J-473X	MG RESISTOR	47kΩ 1/16W J
R6297	NRSA63J-0R0X	MG RESISTOR	0Ω 1/16W J
R6298	NRSA63J-0R0X	MG RESISTOR	0Ω 1/16W J
R6300	NRSA63J-0R0X	MG RESISTOR	0Ω 1/16W J
R6302	NRSA63J-0R0X	MG RESISTOR	0Ω 1/16W J
R6305	NRSA63J-0R0X	MG RESISTOR	0Ω 1/16W J
R6332	NRSA63J-0R0X	MG RESISTOR	0Ω 1/16W J
R6333	NRSA63J-0R0X	MG RESISTOR	0Ω 1/16W J
R6338	NRSA63J-0R0X	MG RESISTOR	0Ω 1/16W J
R6339	NRSA63J-0R0X	MG RESISTOR	0Ω 1/16W J
R6503	NRSA63J-0R0X	MG RESISTOR	0Ω 1/16W J
R6521	NRSA63J-101X	MG RESISTOR	100Ω 1/16W J
R6522	NRSA63J-101X	MG RESISTOR	100Ω 1/16W J
R6523	NRSA63J-102X	MG RESISTOR	1kΩ 1/16W J
R6524	NRSA63J-102X	MG RESISTOR	1kΩ 1/16W J
R6525	NRSA63J-0R0X	MG RESISTOR	0Ω 1/16W J
R6529	NRSA63J-0R0X	MG RESISTOR	0Ω 1/16W J
R6532	NRSA63J-102X	MG RESISTOR	1kΩ 1/16W J
R6533	NRSA63J-0R0X	MG RESISTOR	0Ω 1/16W J
R6534	NRSA63J-0R0X	MG RESISTOR	0Ω 1/16W J
R6535	NRSA63J-102X	MG RESISTOR	1kΩ 1/16W J
R6537	NRSA63J-0R0X	MG RESISTOR	0Ω 1/16W J
R6538	NRSA63J-103X	MG RESISTOR	10kΩ 1/16W J

⚠Ref No.	Part No.	Part Name	Description Local
R6539	NRSA63J-473X	MG RESISTOR	47kΩ 1/16W J
R6541	NRSA63J-102X	MG RESISTOR	1kΩ 1/16W J
R6547	NRSA63J-102X	MG RESISTOR	1kΩ 1/16W J
R6548	NRSA63J-103X	MG RESISTOR	10kΩ 1/16W J
R6549	NRSA63J-103X	MG RESISTOR	10kΩ 1/16W J
R6569	NRSA63J-0R0X	MG RESISTOR	0Ω 1/16W J
R6575	NRSA63J-0R0X	MG RESISTOR	0Ω 1/16W J
R6576	NRSA63J-0R0X	MG RESISTOR	0Ω 1/16W J
R6595	NRSA63J-473X	MG RESISTOR	47kΩ 1/16W J
R6596	NRSA63J-153X	MG RESISTOR	15kΩ 1/16W J
R6599	NRSA63J-823X	MG RESISTOR	82kΩ 1/16W J
R6607	NRSA63J-101X	MG RESISTOR	100Ω 1/16W J
R6609	NRSA63J-101X	MG RESISTOR	100Ω 1/16W J
R6611	NRSA63J-102X	MG RESISTOR	1kΩ 1/16W J
R6707	NRSA63J-0R0X	MG RESISTOR	0Ω 1/16W J
R6712	NRSA63J-0R0X	MG RESISTOR	0Ω 1/16W J
R6713	NRSA63J-0R0X	MG RESISTOR	0Ω 1/16W J
R6730	NRSA63J-0R0X	MG RESISTOR	0Ω 1/16W J
R6731	NRSA63J-0R0X	MG RESISTOR	0Ω 1/16W J
R6732	NRSA63J-0R0X	MG RESISTOR	0Ω 1/16W J
R6921	NRSA63J-0R0X	MG RESISTOR	0Ω 1/16W J
R6922	NRSA63J-0R0X	MG RESISTOR	0Ω 1/16W J
R6923	NRSA63J-0R0X	MG RESISTOR	0Ω 1/16W J
R6924	NRSA63J-0R0X	MG RESISTOR	0Ω 1/16W J
R7031	NRSA63J-0R0X	MG RESISTOR	0Ω 1/16W J
R7032	NRSA63J-151X	MG RESISTOR	150Ω 1/16W J
R7033	NRSA63J-0R0X	MG RESISTOR	0Ω 1/16W J
R7034	NRSA63J-0R0X	MG RESISTOR	0Ω 1/16W J
R7036	NRSA63J-0R0X	MG RESISTOR	0Ω 1/16W J
R7039	NRSA63J-102X	MG RESISTOR	1kΩ 1/16W J
R7041	NRSA63J-223X	MG RESISTOR	22kΩ 1/16W J
R7042	NRSA63J-333X	MG RESISTOR	33kΩ 1/16W J
R7044	NRSA63J-0R0X	MG RESISTOR	0Ω 1/16W J
R7047	NRSA63J-0R0X	MG RESISTOR	0Ω 1/16W J
R7049	NRSA63J-0R0X	MG RESISTOR	0Ω 1/16W J
R7051	NRSA63J-0R0X	MG RESISTOR	0Ω 1/16W J
R7052	NRSA63J-0R0X	MG RESISTOR	0Ω 1/16W J
R7054	NRSA63J-0R0X	MG RESISTOR	0Ω 1/16W J
R7055	NRSA63J-0R0X	MG RESISTOR	0Ω 1/16W J
R7056	NRSA63J-0R0X	MG RESISTOR	0Ω 1/16W J
R7057	NRSA63J-0R0X	MG RESISTOR	0Ω 1/16W J
R7058	NRSA63J-0R0X	MG RESISTOR	0Ω 1/16W J
R7059	NRSA63J-0R0X	MG RESISTOR	0Ω 1/16W J
R7060	NRSA63J-154X	MG RESISTOR	150kΩ 1/16W J
R7061	NRSA63J-0R0X	MG RESISTOR	0Ω 1/16W J
R7062	NRSA63J-0R0X	MG RESISTOR	0Ω 1/16W J
R7063	NRSA63J-0R0X	MG RESISTOR	0Ω 1/16W J
R7064	NRSA63J-103X	MG RESISTOR	10kΩ 1/16W J
R7065	NRSA63J-103X	MG RESISTOR	10kΩ 1/16W J
R7066	NRSA63J-562X	MG RESISTOR	5.6kΩ 1/16W J
R7067	NRSA63J-562X	MG RESISTOR	5.6kΩ 1/16W J
R7068	NRSA63J-0R0X	MG RESISTOR	0Ω 1/16W J
R7069	NRSA63J-0R0X	MG RESISTOR	0Ω 1/16W J
R7072	NRSA63J-0R0X	MG RESISTOR	0Ω 1/16W J
R7077	NRSA63J-102X	MG RESISTOR	1kΩ 1/16W J
R7078	NRSA63J-0R0X	MG RESISTOR	0Ω 1/16W J
R7081	NRSA63J-473X	MG RESISTOR	47kΩ 1/16W J
R7084	NRSA63J-221X	MG RESISTOR	220Ω 1/16W J
R7085	NRSA63J-221X	MG RESISTOR	220Ω 1/16W J
R7086	NRSA63J-0R0X	MG RESISTOR	0Ω 1/16W J
R7087	NRSA63J-0R0X	MG RESISTOR	0Ω 1/16W J
R7088	NRSA63J-0R0X	MG RESISTOR	0Ω 1/16W J
R7089	NRSA63J-102X	MG RESISTOR	1kΩ 1/16W J
R7091	NRSA63J-0R0X	MG RESISTOR	0Ω 1/16W J
R7092	NRSA63J-101X	MG RESISTOR	100Ω 1/16W J
R7093	NRSA63J-101X	MG RESISTOR	100Ω 1/16W J
R7094	NRSA63J-101X	MG RESISTOR	100Ω 1/16W J
R7095	NRSA63J-0R0X	MG RESISTOR	0Ω 1/16W J
R7097	NRSA63J-0R0X	MG RESISTOR	0Ω 1/16W J
R7098	NRSA63J-0R0X	MG RESISTOR	0Ω 1/16W J
R7099	NRSA63J-0R0X	MG RESISTOR	0Ω 1/16W J
R7100	NRSA63J-0R0X	MG RESISTOR	0Ω 1/16W J
R7103	NRSA63J-0R0X	MG RESISTOR	0Ω 1/16W J
R7106	NRSA63J-0R0X	MG RESISTOR	0Ω 1/16W J
R7109	NRSA63J-0R0X	MG RESISTOR	0Ω 1/16W J
R7112	NRSA63J-0R0X	MG RESISTOR	0Ω 1/16W J
R7113	NRSA63J-0R0X	MG RESISTOR	0Ω 1/16W J
R7123	NRSA63J-0R0X	MG RESISTOR	0Ω 1/16W J
R7124	NRSA63J-0R0X	MG RESISTOR	0Ω 1/16W J
R7125	NRSA63J-0R0X	MG RESISTOR	0Ω 1/16W J
R7127	NRSA63J-0R0X	MG RESISTOR	0Ω 1/16W J
R7157	NRSA63J-0R0X	MG RESISTOR	0Ω 1/16W J
R7170	NRSA63J-0R0X	MG RESISTOR	0Ω 1/16W J
R7171	NRSA63J-0R0X	MG RESISTOR	0Ω 1/16W J
R7172	NRSA63J-0R0X	MG RESISTOR	0Ω 1/16W J
R7173	NRSA63J-0R0X	MG RESISTOR	0Ω 1/16W J
R7174	NRSA63J-473X	MG RESISTOR	47kΩ 1/16W J
R7175	NRSA63J-0R0X	MG RESISTOR	0Ω 1/16W J
R7176	NRSA63J-0R0X	MG RESISTOR	0Ω 1/16W J
R7177	NRSA63J-0R0X	MG RESISTOR	0Ω 1/16W J
R7178	NRSA63J-0R0X	MG RESISTOR	0Ω 1/16W J
R7179	NRSA63J-0R0X	MG RESISTOR	0Ω 1/16W J
R7184	NRSA63J-0R0X	MG RESISTOR	0Ω 1/16W J
R7187	NRSA63J-0R0X	MG RESISTOR	0Ω 1/16W J
R7192	NRSA63J-0R0X	MG RESISTOR	0Ω 1/16W J
R7201	NRSA63J-473X	MG RESISTOR	47kΩ 1/16W J
R7202	NRSA63J-473X	MG RESISTOR	47kΩ 1/16W J
R7203	NRSA63J-473X	MG RESISTOR	47kΩ 1/16W J
R7207	NRSA63J-101X	MG RESISTOR	100Ω 1/16W J
R7208	NRSA63J-0R0X	MG RESISTOR	0Ω 1/16W J
R7211	NRSA63J-0R0X	MG RESISTOR	0Ω 1/16W J
R7214	NRSA63J-0R0X	MG RESISTOR	0Ω 1/16W J
R7215	NRSA63J-473X	MG RESISTOR	47kΩ 1/16W J
R7216	NRSA63J-473X	MG RESISTOR	47kΩ 1/16W J
R7217	NRSA63J-473X	MG RESISTOR	47kΩ 1/16W J
R7221	NRSA63J-0R0X	MG RESISTOR	0Ω 1/16W J
R7223	NRSA63J-473X	MG RESISTOR	47kΩ 1/16W J
R7224	NRSA63J-473X	MG RESISTOR	47kΩ 1/16W J
R7225	NRSA63J-473X	MG RESISTOR	47kΩ 1/16W J
R7238	NRSA63J-0R0X	MG RESISTOR	0Ω 1/16W J
R7243	NRSA63J-0R0X	MG RESISTOR	0Ω 1/16W J
R7349	NRSA63J-103X	MG RESISTOR	10kΩ 1/16W J
R7350	NRSA63J-103X	MG RESISTOR	10kΩ 1/16W J
R7351	NRSA63J-103X	MG RESISTOR	10kΩ 1/16W J
R7370	NRSA63J-0R0X	MG RESISTOR	0Ω 1/16W J
R7501	NRSA63J-0R0X	MG RESISTOR	0Ω 1/16W J
R7502	NRSA63J-0R0X	MG RESISTOR	0Ω 1/16W J
R7504	NRSA63J-104X	MG RESISTOR	100kΩ 1/16W J
R7505	NRSA63J-103X	MG RESISTOR	10kΩ 1/16W J
R7512	NRSA63J-0R0X	MG RESISTOR	0Ω 1/16W J
R7513	NRSA63J-0R0X	MG RESISTOR	0Ω 1/16W J
R7514	NRSA63J-0R0X	MG RESISTOR	0Ω 1/16W J
R7515	NRSA63J-102X	MG RESISTOR	1kΩ 1/16W J
R7601	NRSA63J-103X	MG RESISTOR	10kΩ 1/16W J
R7602	NRSA63J-103X	MG RESISTOR	10kΩ 1/16W J
R7603	NRSA63J-0R0X	MG RESISTOR	0Ω 1/16W J
R7604	NRSA63J-0R0X	MG RESISTOR	0Ω 1/16W J
R7605	NRSA63J-471X	MG RESISTOR	470Ω 1/16W J
R7606	NRSA63J-105X	MG RESISTOR	1MΩ 1/16W J
R7607	NRSA63J-682X	MG RESISTOR	6.8kΩ 1/16W J
R7608	NRSA63J-105X	MG RESISTOR	1MΩ 1/16W J
R7611	NRSA63J-102X	MG RESISTOR	1kΩ 1/16W J
R7612	NRSA63J-471X	MG RESISTOR	470Ω 1/16W J
R7613	NRSA63J-102X	MG RESISTOR	1kΩ 1/16W J
R7614	NRSA63J-0R0X	MG RESISTOR	0Ω 1/16W J
R7615	NRSA63J-0R0X	MG RESISTOR	0Ω 1/16W J
R7616	NRSA63J-0R0X	MG RESISTOR	0Ω 1/16W J
R7618	NRSA63J-0R0X	MG RESISTOR	0Ω 1/16W J
R7619	NRSA63J-0R0X	MG RESISTOR	0Ω 1/16W J
R7620	NRSA63J-102X	MG RESISTOR	1kΩ 1/16W J
R7622	NRSA63J-0R0X	MG RESISTOR	0Ω 1/16W J
R7623	NRSA63J-0R0X	MG RESISTOR	0Ω 1/16W J
R7624	NRSA63J-0R0X	MG RESISTOR	0Ω 1/16W J
R7625	NRSA63J-0R0X	MG RESISTOR	0Ω 1/16W J
R7626	NRSA63J-0R0X	MG RESISTOR	0Ω 1/16W J
R7627	NRSA63J-0R0X	MG RESISTOR	0Ω 1/16W J
R7628	NRSA63J-333X	MG RESISTOR	33kΩ 1/16W J
R7631	NRSA63J-102X	MG RESISTOR	1kΩ 1/16W J
R7632	NRSA63J-222X	MG RESISTOR	2.2kΩ 1/16W J
R7634	NRSA63J-102X	MG RESISTOR	1kΩ 1/16W J
R7635	NRSA63J-222X	MG RESISTOR	2.2kΩ 1/16W J
R7643	NRSA63J-0R0X	MG RESISTOR	0Ω 1/16W J
R7644	NRSA63J-0R0X	MG RESISTOR	0Ω 1/16W J
R7646	NRSA63J-0R0X	MG RESISTOR	0Ω 1/16W J
R7649	NRSA63J-103X	MG RESISTOR	10kΩ 1/16W J
R7658	NRSA63J-103X	MG RESISTOR	10kΩ 1/16W J
R7659	NRSA63J-560X	MG RESISTOR	56Ω 1/16W J
R7661	NRSA63J-0R0X	MG RESISTOR	0Ω 1/16W J
R7662	NRSA63J-0R0X	MG RESISTOR	0Ω 1/16W J
R8796	NRSA63J-0R0X	MG RESISTOR	0Ω 1/16W J
R8797	NRSA63J-0R0X	MG RESISTOR	0Ω 1/16W J
R8798	NRSA63J-0R0X	MG RESISTOR	0Ω 1/16W J
R8799	NRSA63J-0R0X	MG RESISTOR	0Ω 1/16W J
R9001	NRSA63J-473X	MG RESISTOR	47kΩ 1/16W J
R9002	NRSA02J-0R0X	MG RESISTOR	0Ω 1/10W J
R9003	NRSA63D-273X	MG RESISTOR	27kΩ 1/16W D
R9004	NRSA63J-684X	MG RESISTOR	680kΩ 1/16W J
R9005	NRSA63D-103X	MG RESISTOR	10kΩ 1/16W D
R9006	NRSA63J-512X	MG RESISTOR	5.1kΩ 1/16W J
R9007	NRSA02J-0R0X	MG RESISTOR	0Ω 1/10W J
R9008	NRSA63J-0R0X	MG RESISTOR	0Ω 1/16W J
R9201	NRSA63J-473X	MG RESISTOR	47kΩ 1/16W J
R9202	NRSA02J-0R0X	MG RESISTOR	0Ω 1/10W J
R9203	NRSA63D-302X	MG RESISTOR	3kΩ 1/16W D
R9205	NRSA63D-103X	MG RESISTOR	10kΩ 1/16W D
R9206	NRSA63J-332X	MG RESISTOR	3.3kΩ 1/16W J
R9207	NRSA02J-0R0X	MG RESISTOR	0Ω 1/10W J
R9209	NRSA63J-0R0X	MG RESISTOR	0Ω 1/16W J
R9306	NCB21EK-102X	C CAPACITOR	1000pF 25V K
R9308	NRSA63J-0R0X	MG RESISTOR	0Ω 1/16W J

⚠Ref No.	Part No.	Part Name	Description Local
R9501	NRSA63J-472X	MG RESISTOR	4.7kΩ 1/16W J
R9502	NRSA63J-223X	MG RESISTOR	22kΩ 1/16W J
R9503	NRSA63J-393X	MG RESISTOR	39kΩ 1/16W J
R9504	NRSA63J-223X	MG RESISTOR	22kΩ 1/16W J
R9505	NRSA63J-103X	MG RESISTOR	10kΩ 1/16W J
R9506	NRSA63J-223X	MG RESISTOR	22kΩ 1/16W J
R9507	NRSA63J-103X	MG RESISTOR	10kΩ 1/16W J
R9508	NRSA63J-223X	MG RESISTOR	22kΩ 1/16W J
R9509	NRSA63J-103X	MG RESISTOR	10kΩ 1/16W J
R9510	NRSA63J-104X	MG RESISTOR	100kΩ 1/16W J
RA6001	NRZ0080-0R0X	NET RESISTOR	0Ω 1/16W J
RA6002	NRZ0034-0R0W	NET RESISTOR	0Ω 1/32W J x4
RA6007	NRZ0080-0R0X	NET RESISTOR	0Ω 1/16W J
RA6008	NRZ0080-0R0X	NET RESISTOR	0Ω 1/16W J
RA6009	NRZ0034-0R0W	NET RESISTOR	0Ω 1/32W J x4
RA6010	NRZ0034-0R0W	NET RESISTOR	0Ω 1/32W J x4
RA6011	NRZ0080-0R0X	NET RESISTOR	0Ω 1/16W J
RA6101	NRZ0040-220X	NET RESISTOR	22Ω 1/16W J x4
RA6102	NRZ0080-220X	NET RESISTOR	22Ω 1/16W J
RA6103	NRZ0040-220X	NET RESISTOR	22Ω 1/16W J x4
RA6104	NRZ0040-220X	NET RESISTOR	22Ω 1/16W J x4
RA6105	NRZ0080-220X	NET RESISTOR	22Ω 1/16W J
RA6106	NRZ0040-220X	NET RESISTOR	22Ω 1/16W J x4
RA6107	NRZ0080-220X	NET RESISTOR	22Ω 1/16W J
RA6108	NRZ0080-220X	NET RESISTOR	22Ω 1/16W J
RA6109	NRZ0040-470X	NET RESISTOR	47Ω 1/16W J x4
RA6110	NRZ0080-470X	NET RESISTOR	47Ω 1/16W J
RA6111	NRZ0040-470X	NET RESISTOR	47Ω 1/16W J x4
RA6112	NRZ0040-470X	NET RESISTOR	47Ω 1/16W J x4
RA6113	NRZ0080-470X	NET RESISTOR	47Ω 1/16W J
RA6114	NRZ0040-470X	NET RESISTOR	47Ω 1/16W J x4
RA6115	NRZ0080-470X	NET RESISTOR	47Ω 1/16W J
RA6116	NRZ0080-470X	NET RESISTOR	47Ω 1/16W J
RA6531	NRZ0034-0R0W	NET RESISTOR	0Ω 1/32W J x4
RA6541	NRZ0033-0R0W	NET RESISTOR	0Ω
RA6542	NRZ0080-0R0X	NET RESISTOR	0Ω 1/16W J
RA6543	NRZ0033-0R0W	NET RESISTOR	0Ω
RA6544	NRZ0080-0R0X	NET RESISTOR	0Ω 1/16W J
RA6545	NRZ0033-0R0W	NET RESISTOR	0Ω
RA6546	NRZ0080-0R0X	NET RESISTOR	0Ω 1/16W J
RA7202	NRZ0080-473X	NET RESISTOR	47kΩ
RA7203	NRZ0080-473X	NET RESISTOR	47kΩ
RA7204	NRZ0080-473X	NET RESISTOR	47kΩ
RA7205	NRZ0080-473X	NET RESISTOR	47kΩ
RA7503	NQR0271-004X	EMI FILTER	
RA7601	NRZ0034-0R0W	NET RESISTOR	0Ω 1/32W J x4
RA7602	NRZ0034-0R0W	NET RESISTOR	0Ω 1/32W J x4
RA7603	NRZ0034-0R0W	NET RESISTOR	0Ω 1/32W J x4
RA7605	NRZ0034-0R0W	NET RESISTOR	0Ω 1/32W J x4
RA7606	NRZ0034-101W	NET RESISTOR	100Ω 1/32W J x4
L6101	NRSA02J-0R0X	MG RESISTOR	0Ω 1/10W J
L6102	NQL79GM-220X	COIL	22uH M
L6103	NQL79GM-220X	COIL	22uH M
L6115	NQR0499-001X	FERRITE BEADS	
L6254	NRSA02J-0R0X	MG RESISTOR	0Ω 1/10W J
L6265	NQR0499-001X	FERRITE BEADS	
L6266	NQR0499-001X	FERRITE BEADS	
L6502	NRSA02J-0R0X	MG RESISTOR	0Ω 1/10W J
L6521	NRZ0034-0R0W	NET RESISTOR	0Ω 1/32W J x4
L6522	NRZ0034-0R0W	NET RESISTOR	0Ω 1/32W J x4
L6523	NRZ0034-0R0W	NET RESISTOR	0Ω 1/32W J x4
L6531	NQR0199-007X	FERRITE BEADS	
L6701	NQR0413-003X	FERRITE BEADS	
L6911	NQR0499-001X	FERRITE BEADS	
L6912	NQR0499-001X	FERRITE BEADS	
L6922	NQL79GM-220X	COIL	22uH M
L6924	NQL79GM-220X	COIL	22uH M
L6925	NQL79GM-220X	COIL	22uH M
L6931	NQR0499-001X	FERRITE BEADS	
L7501	NRSA63J-0R0X	MG RESISTOR	0Ω 1/16W J
L7502	NRSA63J-0R0X	MG RESISTOR	0Ω 1/16W J
L9001	NQLC8CM-150X	COIL	15uH M
L9201	NQLC8CM-150X	COIL	15uH M
L9306	NQR0351-003X	FERRITE BEADS	
CN001	QGF0508C2-50W	CONNECTOR	FFC/FPC (1-50)
CN002	QGF0508C2-40W	CONNECTOR	FFC/FPC (1-40)
J8501	NNZ0117-001	CONNECTOR	DIGITAL IN-1
J8502	NNZ0117-001	CONNECTOR	DIGITAL IN-2
K6250	NRSA02J-0R0X	MG RESISTOR	0Ω 1/10W J
K6268	NRSA02J-0R0X	MG RESISTOR	0Ω 1/10W J
K6271	NQR0499-001X	FERRITE BEADS	
K6272	NQR0499-001X	FERRITE BEADS	
K6274	NQR0499-001X	FERRITE BEADS	
K6921	NRSA02J-0R0X	MG RESISTOR	0Ω 1/10W J
K7032	NRSA02J-0R0X	MG RESISTOR	0Ω 1/10W J
K7033	NRSA02J-0R0X	MG RESISTOR	0Ω 1/10W J
K7034	NRSA02J-0R0X	MG RESISTOR	0Ω 1/10W J
K7202	NRSA63J-0R0X	MG RESISTOR	0Ω 1/16W J
K7211	NQR0499-002X	FERRITE BEADS	
K7501	NQR0413-002X	FERRITE BEADS	
K7504	NRSA63J-0R0X	MG RESISTOR	0Ω 1/16W J
K7601	NRSA02J-0R0X	MG RESISTOR	0Ω 1/10W J
LC6501	NQR0479-001X	EMI FILTER	
LC7505	NQR0483-005X	EMI FILTER	100uF 25V Z
LC9303	NQR0483-005X	EMI FILTER	100uF 25V Z
LC9305	NQR0483-005X	EMI FILTER	100uF 25V Z
LC9307	NQR0483-005X	EMI FILTER	100uF 25V Z
X6250	NAX0580-001X	CXO	27.0000MHz
X7001	NAX0669-001X	C RESONATOR	6.000MHz
X7601	NAX0613-001X	C RESONATOR	16.000MHz

ATSC TUNER MODULE P.W. BOARD ASS'Y (SSD-2204A-M2)

REFER TO PARTS LIST IN PAGE 3-18 FOR THIS P.W. BOARD.

REMOTE CONTROL UNIT PARTS LIST (RM-C18G-1H)

⚠	Ref.No.	Part No.	Part Name	Description	Local
		UR77EC1403A	BATTERY COVER		

PACKING

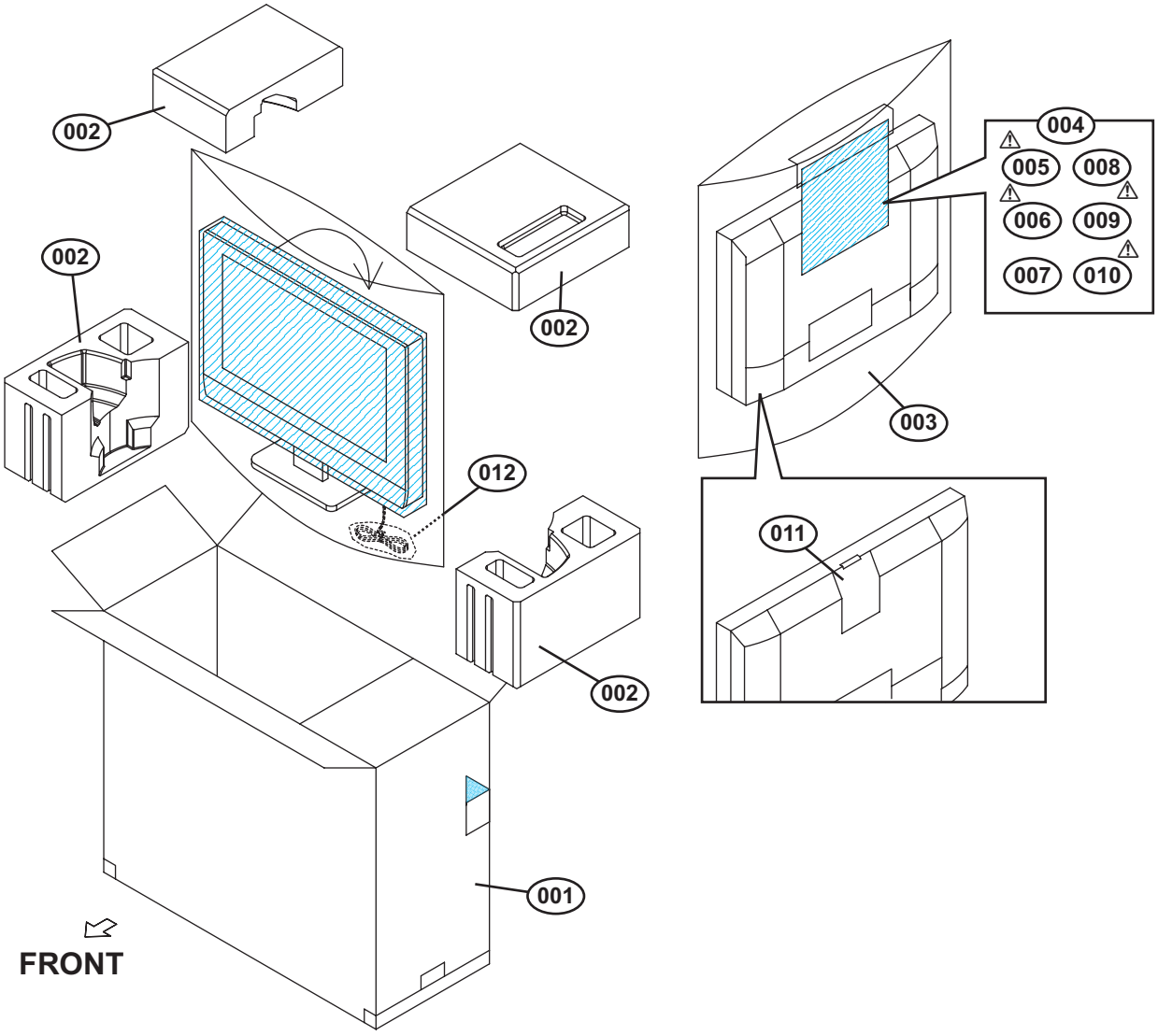

PACKING PARTS LIST

⚠	Ref.No.	Part No.	Part Name	Description	Local
	001	LC10181-049A-A	PACKING CASE		
	002	LC12827-001A-A	CUSHION ASSY	4pcs in 1set	
	003	GG30097-004A-H	POLY BAG		
	004	QPA02503505P	POLY BAG	25cm x 35cm	
⚠	005	----------	WARRANTY CARD	BT-52006-2Q	
⚠	006	BT-51034-2Q	REGIST. CARD		
	007	----------	BATTERY	AA/R6(x2)	
	008	RM-C18G-1H	REMOTE CONTROL UNIT		
⚠	009	LCT2104-001A-A	INST BOOK	English	
⚠	010	LCT2105-001A-A	INST BOOK	French	
	011	LCT2111-001A-A	INST SHEET	English/French/Spanish	
	012	QPA01002305	POLY BAG	10cm x 23cm	

Other ManualsLib Projects

www.manualslib.com

www.manualslib.de

www.manualslib.es

www.manualslib.fr

www.manualslib.nl

www.manualslib.mx

www.manualslib.tech 30+ Languages